ALPHA BLDG SET 08-27-2024

COMMUNITY CENTER BLDG. – PHASE TWO

8134 GEIGER STREET, N.W.
COVINGTON, GEORGIA

SCOPE OF WORK:
PHASE ONE1:
DEMOLITION OF PORTIONS OF EXISTING WINGS,
RENOVATIONS TO REMAINING BUILDING,
ADDITION OF BUILDING FOR ELECTIONS DEPT.
PHASE TWO:
ADDITION OF COMMUNITY CENTER BUILDING

CONSULTANTS & CONTRACTORS

GENERAL CONTRACTOR
SUNBELT BUILDERS™
CONTACT – MIKE McCROREY, JR.
10641 HWY 36
COVINGTON, GEORGIA 30014
(770) 786-3031

CIVIL ENGINEER
GEORGIA CIVIL, INC.
CONTACT – JASON BROWN
113 W. JEFFERSON ST., SUITE A
MADISON, GEORGIA 30650
(706) 342-1104

ARCHITECT
BETA DESIGN GROUP, INC.
CONTACT – MIKE SHACKLEY, AIA
2118 ROSSER PLACE
STONE MOUNTAIN, GEORGIA 30087
(770) 491-9250

STRUCTURAL ENGINEER
OCONEE ENGINEERING
CONTACT – RALPH BOSWELL, P.E.
P.O. BOX 116
GREENSBORO, GA. 30642
(770) 313-0302

MECHANICAL/PLUMBING CONSULTANT
TOTAL ENGINEERS
CONTACT – KRUNAL PATEL, P.E.
169 NEW STREET,
MACON, GEORGIA 31201
(478) 741-4632

ELECTRICAL CONSULTANT
ELECTRICAL DESIGN CONSULTANTS, INC.
CONTACT – JEFF McGEE, P.E.
175 NEW STREET, SUITE 1
MACON, GEORGIA 31201
(478) 781-1833

ABBREVIATIONS

@ – AT
A/C – AIR CONDITION
A.C.T. – ACOUSTICAL CEILING TILE
A.F.F. – ABOVE FINISH FLOOR
ALUM. OR AL. – ALUMINUM
ANOD. – ANODIZED
APPROX. – APPROXIMATE
A.S.F. – ALUMINUM STORE FRONT
BD. – BOARD
BLDG. – BUILDING
BMC. – BUTLER MANUFACTURING CO.
BOT. – BOTTOM
C.O. – CASED OPENING
C.J. – CONTROL JOINT
C.T. – CERAMIC TILE
C. – CENTER LINE OR COLUMN LINE
CLG. – CEILING
CLR. – CLEAR
CMU. – CONCRETE MASONRY UNITS
COL. – COLUMN
CONC. – CONCRETE
CONT. – CONTINUOUS
CONTR. – CONTRACTOR
D.S. – DOWNSPOUT
DBL. – DOUBLE
DEMO. – DEMOLITION
DEPT. – DEPARTMENT
DIA. – DIAMETER
DIM. – DIMENSION
DISP. – DISPENSER
DISPL. – DISPOSAL
DRWGS. – DRAWINGS
DTL. – DETAIL
EA. – EACH
E.F. – EXHAUST FAN
EQ. – EQUAL
E.W.C. – ELECTRIC WATER COOLER
E.I.F.S. – EXTERIOR INSULATION FINISH SYSTEM
ELEC. – ELECTRICAL
ELEV. – ELEVATION
EQUIP. – EQUIPMENT
E.S. – EXPOSED STRUCTURE
E.S.Q. – EPOXY SEAMLESS QUARTZ
EXIST. – EXISTING
EXT. – EXTERIOR
F.D. – FLOOR DRAIN
F.E. – FIRE EXTINGUISHER
F.F. – FINISH FLOOR
FLR. – FLOOR
F.O.B. – FACE OF BRICK
F.O.C. – FACE OF CONCRETE
F.O.M. – FACE OF MASONRY
F.O.S. – FACE OF STUD
FOUND. OR FDN. – FOUNDATION
F.R.P. – FIBERGLASS REINFORCED PANELS
F.R.T. – FIRE RETARDANT TREATED
FTG.– FOOTING
FT. – FOOT
F.V. – FIELD VERIFY
GA. – GAGE OR GAUGE
G.B. – GRAB BAR
G.C. – GENERAL CONTRACTOR
GYP.BD. – GYPSUM WALL BOARD
H. – HIGH
H. OR H.C. – HANDICAP
H.B. – HAIRPIN BAR
H.D. – HUB DRAIN
H.M. – HOLLOW METAL
HT. – HEIGHT
HORIZ. – HORIZONTAL
INSUL. – INSULATION
JST. – JOIST
JT. – JOINT
L'DRY. – LAUNDRY
LLH. – LONG LEG HORIZONTAL
LLV. – LONG LEG VERTICAL
M. – MIRROR
M.C.J. – MASONRY CONTROL JOINT
M.C. – MASONRY COLUMN
M.S. – METAL STUD
M.S.S. – MISC. STEEL SUPPLIER
MANUF. OR MFR. – MANUFACTURER
MAX. – MAXIMUM
MECH. – MECHANICAL
MEZZ. – MEZZANINE
MIN. – MINIMUM
MISC. – MISCELLANEOUS
M.O. – MASONRY OPENING
MTL. – METAL
N.I.C. – NOT IN CONTRACT
N.R.P. – NON-REMOVABLE (HINGE) PIN
N.T.S. – NOT TO SCALE
O.C. – ON CENTER
O.H. – OVERHEAD OR OPPOSITE HAND
O.F.C.I. – OWNER FURNISH, CONTRACTOR INSTALL
O.F.O.I. – OWNER FURNISH, OWNER INSTALL
PART. – PARTITION
PL. – PLATE
PLUMB. – PLUMBING
PNL. – PANEL
POLY. – POLYETHYLENE
PRE-FIN OR P.F. – PRE-FINISHED
PSF. – POUND PER SQUARE FOOT
PSI. – POUND PER SQUARE INCH
P.T. – PRESSURE TREATED
PT. – PAINT
P.T.D. – PAPER TOWEL DISPENSER
Q.T. – QUARRY TILE
R. – RISER
REF. – REFERENCE
REINF. – REINFORCE
REQ'D. – REQUIRED
R.O. – ROUGH OPENING
S. – STRUCTURE LINE
S.D. – SOAP DISPENSER
S.F. – SQUARE FOOT
SJ. – SAVED JOINT
S.N.D. – SANITARY NAPKIN DISP.
S.P.J. – SECOND POUR JOINT
S.R. – SPRINKLER RISER
S.S. – STAINLESS STEEL
ST. – STAIN
SCWD. – SOLID CORE WOOD
SPECS. – SPECIFICATIONS
STL. – STEEL
STRUCT. – STRUCTURAL
S/S. – SLOP SINK OR SANITARY SEWER
T.D.S. – TURNED DOWN SLAB
T/F. – TOP OF FOOTING
T.P.D. – TOILET PAPER DISPENSER
T.O.C. – TOP OF CONCRETE
T.O.S. – TOP OF STEEL
T.O.W. – TOP OF WALL
T.S. – THICK SLAB
TEMP. – TEMPERED
TR. – TREADS
TYP. – TYPICAL
U.L. DES. NO. – UNDERWRITERS LABORATORIES DESIGN NO.
U.N.O. – UNLESS NOTED OTHERWISE
U.S. – URINAL SCREEN
V.C.T. – VINYL COMPOSITION TILE
VERT. – VERTICAL
VWC. – VINYL WALL COVERING
VXB – VERTICAL "X" BRACING
W. – WIDE
W/ – WITH
W/H. – WATER HEATER
WD. – WOOD
WF. – WALL FOOTING
W.R. – WATER RESISTANT

SYMBOLS

NORTH ARROW
ELEVATION # – SHOWN ON THIS SHEET – EXTERIOR ELEVATION
SHOWN ON THIS SHEET – ELEVATION SHOWN – INTERIOR ELEVATION
DETAIL NUMBER – SHOWN ON THIS SHEET – WALL SECTIONS
DETAIL # – SHOWN ON THIS SHEET – DETAIL REFERENCE
DETAIL # – TITLE – SCALE: – DRAWING TITLE
WINDOW TYPES
HANDICAP FIXTURE
FIRE EXTINGUISHER
PIPE BOLLARD
TITLE 123 – ROOM NUMBER
TOILET ACCESSORIES OR EQUIPMENT NUMBER
DOOR NUMBER
CEILING FINISH
FIRST FLOOR – DATUM ELEVATION
COLUMN LINE
MATCH LINE
REVISION / REISSUE
SPANDREL GLASS
TEMPERED GLASS
WALL TYPE

MATERIALS

BRICK
CONCRETE
CONCRETE MASONRY UNIT (C.M.U.)
METAL LATH & STUCCO
RIGID INSULATION
BATT INSULATION
EARTH
GRAVEL
METAL – FERROUS STEEL
GYPSUM BOARD SHOWN IN SECTION
PLYWOOD
FINISH WOOD

ISSUE DATES

04/19/24	PROGRESS SET RELEASED FOR PRICING
06/28/24	RELEASED FOR PERMIT AND CONSTRUCTION

VICINITY MAP

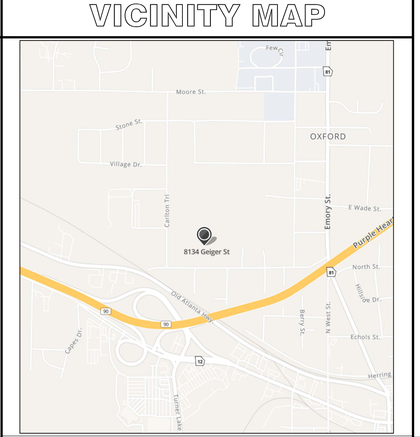

PROJECT CRITERIA

NAME OF DEVELOPMENT: RL COUSINS COMMUNITY CENTER
LOCATION OF DEVELOPMENT: 8134 Geiger Street, N.W., Covington, Georgia
ARCHITECT: E. MICHAEL SHACKLEY, A.I.A. PHONE #: (770) 491-9250 GA. STATE REGIS. #: 7718
STR'L. ENG.: See structural drawings PHONE #: GA. STATE REGIS. #:

A. Occupancy Classification: Mixed Use, Business, Storage, Assembly (Highest Use) – Group A-3
B. Type of Construction: IIB Sprinklered: Yes Fire Alarm: Yes
C. Seismic Risk Category: II Seismic Design Category: C
D. Building Area in Square Feet:
Existing 31,813 Demolition 0 Additions: 9,384 Total: 41,197

Allowable area: $Aa = At + \left[\frac{At\ If}{100}\right]$

$Aa = 38,000 + 28,500 = 66,500$

E. Number of Stories: 1 Includes: Basement: N/A Mezzanine: N/A Canopy – Porch N
F. Building Height (ft): 25'-0" Max. per IBC: 75'
G. Building permit: Complete Yes Shell: No # Suites: – # Buildings: 1
H. Calculated Occupancy Load: 514, See sheet A-1.5.2
I. Required Minimum Live Loads in P.S.F.: Floor: 100 Roof: 20
J. All construction described in these plans shall be constructed in accordance with the following codes:
1) International Building Code (ICC) – 2018 Edition with 2020, 2022 and 2024 Georgia State Amendments
2) International Mechanical Code (ICC) – 2018 Edition with 2020 and 2024 Georgia State Amendments
3) International Plumbing Code (ICC) – 2018 Edition with 2020, 2022, 2023 and 2024 Georgia State Amendments and IPC appendix F
4) International Fire Code (ICC) – 2018 Edition with 2020 and 2022 Georgia State Fire Commissioner Amendments 120-3-3-.04
5) International Fuel Gas Code (ICC) – 2018 Edition with 2020 and 2022 Georgia State Amendments
6) International Energy Conservation Code – 2015 Edition with 2020, 2022 and 2023 Georgia State Supplements and Amendments
7) National Electrical Code (NFPA) – 2020 Edition with 2021 Georgia State Amendments
8) NFPA 101 Life Safety Code – 2018 Edition with 2022 Georgia State Fire Commissioner Amendments 120-3-3-.04(72)
9) Georgia Accessibility Code Chapter 120-3-20(.01-.08) with 2022 Georgia State Fire Commissioner Amendments 120-3-3-.08 through .11
10) U.S. Dept. of Justice, 2010 A.D.A. Standards for Accessible Design (adopted Mar. 15, 2012)
11) NFPA 10 Portable Fire Extinguishers – 2018 Edition with 2022 Georgia State Fire Commissioner Amendments
12) Georgia Erosion and Sedimentation Act of 1975, Third Edition, 1992
13) Current editions of the NFPA Codes and Standards as adopted and modified by the State Fire Marshal, in particular 2020 OCGA 120-3-3 Georgia Minimum Fire Safety Standards
14) International Existing Building Code – 2018 Edition with 2020 Georgia State Amendments
15) NFPA 13, Automatic Fire Sprinkler Code, 2019 Edition with 2022 Georgia State Fire Commissioner Amendments

K. Owner shall maintain factory installed plugs in dumpster drains at all times so as to prohibit liquid drainage from dumpster.
L. Signs are not approved under the scope of this Building Permit. A separate sign location permit is required for each sign. Please see Development Department for review and approval of all signage.
M. Storage racks are not approved under this Building Permit. A separate racking permit is required for storage racking. Please see Development Department for review and approval of all racking.
N. Each construction office trailer requires a separate building permit which shall be purchased directly from the Building Department Section.
O. Plans for fire-protection sprinkler piping, including complete seismic support details, shall be reviewed and approved prior to installation by the City Fire Marshal's Office for compliance with NFPA 13 and ASCE/SEI 7-10 Sections 13.3.1 and 13.3.2.
P. The drawings included in this package are instruments of service by contractual agreement with the client (see title block) and are intended for use for this particular project noted. Contractual obligations do not continue past the receipt of the building permit and contract administration services are not included in the scope of work provided by Beta Design Group, Inc. These drawings are the property of Beta Design Group, Inc. and may not be used for other projects or reproduced in any manner without the permission of Beta Design Group, Inc. By using these drawings for construction, the client represents that he has reviewed and approved the drawings.

DRAWING INDEX

ARCHITECTURAL
COVER SHEET
A-0.3 GENERAL NOTES & SPECIFICATIONS
A-0.4 GENERAL NOTES & SPECIFICATIONS
A-1.0.4 WING B (PHASE 2) DEMOLITION PLAN
A-1.2 OVERALL (PHASE 2) RENOVATED KEY PLAN
A-1.2.4 ENLARGED FLOOR PLAN
A-1.2.5 INTERIOR FLOOR PLAN
A-1.3.4 COMM. CTR. REFLECTED CEILING PLAN
A-1.5 ROOF PLAN
A-1.5.2 LIFE SAFETY PLAN
A-1.6.3 ENLARGED TOILET PLANS & DETAILS
A-2.2 BUILDING ELEVATIONS
A-3.1.1 INTERIOR FINISH & WINDOW SCHEDULES
A-3.2.1 DOOR SCHEDULE
A-3.3.1 DOOR DETAILS
A-3.5 INTERIOR ELEVATIONS
A-4.1.4 WALL TYPE DETAILS
A-4.1.5 WALL TYPE DETAILS
A-4.4 WALL SECTIONS
A-4.5 WALL SECTIONS
A-4.6 WALL SECTIONS
A-4.7 WALL SECTIONS
A-4.8 WALL SECTIONS
A-4.9 WALL SECTIONS
A-4.10 WALL SECTIONS
A-5.2 CONSTRUCTION DETAILS
STRUCTURAL
S-0.1 STRUCTURAL SPECIFICATIONS
S-0.2 STRUCTURAL SPECIFICATIONS
S-0.3 SPECIAL INSPECTIONS
2S-1.0 FOUNDATION PLAN
2S-1.1 ROOF FRAMING PLAN
2S-3.0 SECTIONS
2S-3.1 SECTIONS
2S-3.2 SECTIONS
2S-4.0 FOUNDATION & FRAMING DETAILS
2S-4.1 FRAMING DETAILS

The drawings listed below were prepared by other consultants that are not under direct supervisory control of Beta Design Group and are included herein for reference and convenience only. This list has been prepared to the best of our ability and may not reflect the complete list of drawings available for this project.

MECHANICAL
M-0.1 MECHANICAL SPECIFICATIONS
M-0.2 MECHANICAL SCHEDULES
M-0.3 MECHANICAL DETAILS
M-1.0 OVERALL MECHANICAL PLAN
M-1.1 ENLARGED COMM. BLDG. MECH. PLAN
PLUMBING
P-0.1 PLUMBING SPECIFICATIONS
P-0.2 FIRE SPRINKLER SPECIFICATIONS
P-1.0 OVERALL PHASE TWO PLUMBING PLAN
P-1.1 COMMUNITY BLDG. PLUMBING PLAN
P-2.1 RR & KITCHEN PLUMBING PLANS
ELECTRICAL
E-0.1 ELECTRICAL SPECS., DETAILS & LEGENDS
E-0.2 ELECTRICAL SPECIFICATIONS
E-1.1 SITE PLAN – ELECTRICAL
E-2.1 COMMUNITY BUILDING PLAN – LIGHTING
E-3.1 COMMUNITY BUILDING PLAN – POWER & TEL/DATA/TV
E-4.1 COMMUNITY BUILDING PLAN – FIRE ALARM, SOUND & SECURITY
E-5.1 POWER RISER DIAGRAM, DETAILS & SCHEDULES
E-6.1 ELECTRICAL DETAILS
E-6.2 COMCHECK LIGHTING REPORTS

phase two, for construction

© BETA DESIGN GROUP, INC. 2024. This drawing may be utilized only for the purpose of constructing or installing the work shown thereon at the site of the work specified. Any other use of this drawing, including without limitation, any reproduction or alteration of this drawing, without the prior written approval of Beta Design Group, Inc. is prohibited.

STATE OF GEORGIA – E. MICHAEL SHACKLEY – CERTIFICATE NO. 7718 – REGISTERED ARCHITECT

Beta Design Group, Inc.
Architecture
2118 Rosser Place Stone Mountain, GA. 30087
Phone: 770.491.9250
Email: mikes@betadesigngroup.com

Client: SUNBELT BUILDERS™
10641 HWY 6 COVINGTON GA 30014 / 770.786.3031

Project:
R. L. COUSINS COMMUNITY CENTER
NEWTON CO. BOC RFP #24-04
8134 GEIGER STREET, N.W.
COVINGTON, GEORGIA

Issue Date:	Initial:	Drwg. Revision Description:
07/11/24	E.M.S.	1. DRWG. COORD. W/ CONTR.
08/12/24	E.M.S.	2. CITY COMMENTS

Project No.: 2023012
Drwg. Date: 06/28/24
Drwg. Revision: 08/12/24
Drawn By: B.D.G.
Checked By: E.M.S.
File Name: 2023012 Cover

Sheet Title: COVER SHEET

Sheet No.: 2023012B

BUILDING GENERAL NOTES AND SPECIFICATIONS:

DIVISION 01 - GENERAL

GENERAL:

1. THESE DRAWINGS HAVE BEEN PREPARED FOR PERMITTING PURPOSES ONLY ON A CONTRACTOR-LED DESIGN/BUILD BASIS AND ARE NOT TO BE USED FOR COMPETITIVE BIDDING.

2. THIS DESIGN FIRM WILL NOT BE RESPONSIBLE FOR AND WILL NOT HAVE CONTROL OR CHARGE OF CONSTRUCTION MEANS, METHODS, TECHNIQUES, SEQUENCES OR PROCEDURES, OR FOR SAFETY PRECAUTIONS AND PROGRAMS IN CONNECTION WITH THIS PROJECT AND WILL NOT BE RESPONSIBLE FOR CONTRACTOR'S FAILURE TO CARRY OUT THE WORK ON THIS PROJECT IN ACCORDANCE WITH THESE CONSTRUCTION DOCUMENTS OR INDUSTRY STANDARDS. THIS FIRM WILL NOT BE RESPONSIBLE FOR OR HAVE CONTROL OVER THE ACTS OR OMISSIONS OF THE CONTRACTOR, SUBCONTRACTORS, OR ANY OTHER PERSON PERFORMING ANY OF THE WORK ON THIS PROJECT.

3. ALL ENVIRONMENTAL ISSUES ARE THE SOLE RESPONSIBILITY OF THE OWNER. NEITHER ARCHITECT OR ENGINEER, GENERAL CONTRACTOR OR SUBCONTRACTORS ARE RESPONSIBLE FOR DISCOVERY, TESTING OR REMOVAL OF ANY HAZARDOUS MATERIAL AS PART OF THEIR SCOPE OF WORK UNLESS SPECIFICALLY STIPULATED BY WRITTEN AGREEMENT. IF, DURING THE COURSE OF WORK, THE GENERAL CONTRACTOR OR SUBCONTRACTORS DISCOVER HAZARDOUS MATERIALS OR CONDITIONS THEY SHALL NOTIFY THE OWNER'S REPRESENTATIVE IMMEDIATELY, BEFORE PROCEEDING WITH THE WORK.

4. BETA DESIGN GROUP, INC., INCLUDING THE ARCHITECT OF RECORD, ONLY ASSUMES RESPONSIBILITY FOR THAT WHICH WAS PREPARED BY BETA DESIGN GROUP, INC.

5. CONTRACTOR SHALL EXERCISE PROPER PRECAUTION BY VISITING THE BUILDING OR SITE TO VERIFY ALL EXISTING CONDITIONS AND LAYOUT OR WORK. NO ALLOWANCE WILL BE SUBSEQUENTLY MADE IN HIS BEHALF BECAUSE OF ANY ERROR ON HIS PART RELATED TO ABSENCE OF KNOWLEDGE ABOUT THE WORK OR THE SITE. IMMEDIATELY NOTIFY ARCHITECT OF ANY DISCREPANCIES. CONTRACTOR IS RESPONSIBLE FOR ANY ERROR RESULTING FROM FAILURE TO EXERCISE SUCH PRECAUTION.

6. THE CONTRACTOR SHALL FURNISH ALL LABOR, MATERIALS AND EQUIPMENT, PAY ALL FEES AND COSTS, SHALL OBTAIN ALL PERMITS, APPROVALS AND INSPECTIONS.

7. ANY DISCREPANCIES, ERRORS OR OMISSIONS DISCOVERED IN THE CONTRACT DOCUMENTS SHALL BE BROUGHT TO THE ATTENTION OF THE ARCHITECT BEFORE PROCEEDING WITH RELATED WORK. OTHERWISE, THE CORRECTION OF SUCH ITEMS IS THE RESPONSIBILITY OF THE CONTRACTOR AND/OR SUBCONTRACTOR.

8. WHERE A DETAIL, TYPICAL DETAIL, SECTION, TYPICAL SECTION OR A NOTE IS SHOWN FOR ONE CONDITION, IT SHALL APPLY FOR ALL LIKE OR SIMILAR CONDITIONS UNLESS OTHERWISE NOTED.

9. THE CONTRACTOR SHALL VERIFY ALL DIMENSIONS AND CONDITIONS. DETAILS SHOWN ON DRAWINGS ARE GENERAL IN NATURE AND MAY OR MAY NOT SHOW ALL PERTINENT INFORMATION FOR FABRICATIONS. CONTRACTOR SHOULD COORDINATE WITH OTHER DISCIPLINES AND REFER TO ARCHITECTURAL, MECHANICAL, ELECTRICAL, PLUMBING AND FIRE PROTECTION DRAWINGS FOR INSERTS, SLEEVES, CURBS, PADS, ETC. AFFECTING STRUCTURAL WORK NOT INDICATED ON STRUCTURAL DRAWINGS.

10. ALL CONSTRUCTION DEBRIS SHALL BE REMOVED FROM THE PREMISES AT COMPLETION OF PROJECT.

11. THE CONSTRUCTION TYPE, AS DEFINED BY NFPA 220, SHALL BE TYPE II, 000 (NONCOMBISTIBLE, 0 HOUR RATINGS).

INSPECTIONS:

1. CONTACT THE COUNTY BUILDING DEPARTMENT AND FIRE MARSHAL'S OFFICES FOR INSPECTION REQUIREMENTS.

DEMOLITION:

1. ALL DEMOLITION SHALL BE IN ACCORDANCE WITH IFC 2018 CHAPTER 33 AND WITH GA 120-3-3.

ACCESSIBILITY REQUIREMENTS:

1. TO THE BEST OF OUR KNOWLEDGE, INFORMATION AND BELIEF, THE DESIGN DEPICTED IN THESE DRAWINGS AND AS PREPARED BY BETA DESIGN GROUP MEETS THE REQUIREMENTS OF "GEORGIA ACCESSIBILITY CODE FOR BUILDINGS AND FACILITIES", 2014 OCGA CHAPTER 120-3-20.

2. THE BUILDING AND FACILITIES SHALL ALSO BE DESIGNED TO COMPLY WITH TITLE III OF THE AMERICANS WITH DISABILITIES ACT (ADA) OF 2010 ADOPTING 2010 ADA STANDARDS FOR ACCESSIBLE DESIGN.

3. ADDITIONAL REQUIREMENTS ARE CITED IN NUMEROUS SECTIONS OF THESE NOTES AND SPECIFICATIONS. CAREFULLY READ ALL ITEMS FOR APPLICABLE REQUIREMENTS.

4. SINKS IN BREAKROOMS SHALL COMPLY WITH 120-3-20-.35 (2,3,4,5,7) OF GEORGIA ACCESSIBILITY CODE FOR HEIGHT, KNEE CLEARANCE, DEPTH, CLEAR FLOOR SPACE AND FAUCETS. SPECIFICALLY, INSTALLED COUNTERS OR WORK SURFACES IN ANY BREAKROOM SHALL HAVE TOPS AT 34" FROM THE FLOOR. MAXIMUM DEPTHS OF COUNTERS TO BE 24" WHERE THE UNITS ARE BACKED BY A VERTICAL WALL. SEE DETAILS.

5. IF SEATING SPACES FOR PEOPLE IN WHEELCHAIRS ARE PROVIDED AT FIXED TABLES OR COUNTERS, THEN CLEAR FLOOR SPACE COMPLYING WITH RULE 120-3-20-.13(4) (30"X48") SHALL BE PROVIDED PER THE GEORGIA ACCESSIBILITY CODE. CLEAR FLOOR SPACE SHALL NOT OVERLAP KNEE SPACE BY MORE THAN 19 INCHES.

6. SEATS, TABLES AND WORK SURFACES SHALL COMPLY WITH THE REQUIREMENTS OF RULE 120-3-20-40 OF THE GEORGIA ACCESSIBILITY CODE.

7. CURB RAMPS SHALL HAVE A DETECTABLE WARNING COMPLYING W/ RULE 120-3-20-40. DETECTABLE WARNING TEXTURES SHALL CONSIST OF TRUNCATED DOMES, EXPOSED AGGREGATE CONCRETE, CUSHIONED SURFACES MADE OF RUBBER OR PLASTIC, FOR RAISED SURFACE. THE DETECTABLE WARNING SHALL EXTEND THE FULL WIDTH & DEPTH OF THE CURB RAMP INCLUDING SITE. RULE 120-3-20-.18(7).

8. CONTROLS AND OPERATING MECHANISMS SHALL BE OPERABLE WITH ONE HAND AND SHALL NOT REQUIRE TIGHT GRASPING, PINCHING OR TWISTING OF THE WRIST. THE FORCE REQUIRED TO ACTIVATE CONTROLS SHALL BE NO GREATER THAN 5LB.

9. NEWLY HUNG, OR REHUNG ACCESSIBLE PASSAGE DOORS IN EXISTING SPACES AT ENTRY OR INSIDE EVERY BUILDING SHALL BE PROVIDED WITH HANDICAP OPENING DEVICES (HANDLES, PULLS, LATCHES, LOCKS, LEVERS, PANIC HARDWARE, OR U-SHAPE DESIGNED AND OTHER DEVICES, ETC.) AND SHALL HAVE A SHAPE THAT IS EASY TO GRASP WITH ONE HAND AND DOES NOT REQUIRE TIGHT GRASPING, TIGHT PINCHING OR TWISTING OF THE WRIST TO OPERATE. LEVER-OPERATED MECHANISMS, PUSH-TYPE MECHANISMS AND U-SHAPED HANDLES ARE ACCEPTABLE DESIGNS. RULE 120-3-20-.24 (9) SHALL APPLY.

SIGNAGE:

1. THE INTERNATIONAL SYMBOL OF ACCESSIBILITY SHALL BE USED TO IDENTIFY ACCESSIBLE FACILITIES. SPECIFICALLY, THE ENTRANCE AND TOILETS SHALL HAVE SIGNS. SIGNS SHALL HAVE RAISED AND BRAILLE LETTERS AND PICTORIAL SYMBOL SIGNS. MOUNTING HEIGHT SHALL BE 60" ABOVE FINISH FLOOR TO THE CENTER OF THE SIGN AND PLACE ON THE LATCH SIDE OF DOORS OR NEAREST ADJACENT WALL. CHARACTER PROPORTION, HEIGHT, PICTOGRAMS, FINISH AND CONTRAST SHALL COMPLY WITH GEORGIA ACCESSIBILITY CODE RULE 120-3-20-.41(4), (5) AND (6).

2. COUNTY CLEAN INDOOR AIR ORDINANCES SHALL APPLY. A SIGN CLEARLY STATING THAT SMOKING IS PROHIBITED SHALL BE CONSPICUOUSLY POSTED BY THE BUILDING OWNER, OPERATOR, MANAGER OR OTHER PERSON IN CONTROL IN EVERY PUBLIC PLACE OR PLACE OF EMPLOYMENT. "NO SMOKING" SIGNS OR THE INTERNATIONAL "NO SMOKING" SYMBOL CONSISTING OF A PICTORIAL REPRESENTATION OF A BURNING CIGARETTE ENCLOSED IN A RED CIRCLE WITH A RED BAR ACROSS IT SHALL BE POSTED.

PROTRUDING OBJECTS:

1. OBJECTS PROTRUDING FROM WALLS, FREESTANDING, OVERHEAD, OVERHANGING OBJECTS AND OBJECTS MOUNTED ON POSTS AND PYLONS INSTALLED WITH LEADING EDGES BETWEEN 27 IN. AND 80 IN. ABOVE THE FINISHED FLOOR SHALL PROTRUDE NO MORE THAN 4 IN. TO WALKS, HALLS, CORRIDORS, PASSAGEWAYS OR AISLES. OBJECTS MOUNTED WITH THEIR LEADING EDGES AT OR BELOW 27 IN. ABOVE THE FINISHED FLOOR MAY PROTRUDE ANY AISLES. FREESTANDING OBJECTS MOUNTED ON POSTS OR PYLONS MAY OVERHANG 12 IN. MAXIMUM FROM 27 IN.TO 80 IN. ABOVE THE GROUND OR FINISHED FLOOR. PROTRUDING OBJECTS SHALL NOT REDUCE THE CLEAR WIDTH OF AN ACCESSIBLE ROUTE OR MANEUVERING SPACE.

TOILET AREAS & TOILET ACCESSORIES:

1. EACH PUBLIC AND COMMON USE TOILET SHALL BE MADE ACCESSIBLE AND USABLE BY THE PHYSICALLY HANDICAPPED.

2. HANDICAP ACCESSIBLE RESTROOMS SHALL HAVE AN UNOBSTRUCTED CLEAR FLOOR SPACE OF 5' DIAMETER CIRCULAR AREA OR "T" SHAPE SPACE CONFORMING TO GEORGIA ACCESSIBILITY CODE RULE 120-3-20-.33.

3. HANDICAP WATER CLOSET HEIGHT SHALL BE 17 TO 19 IN. MEASURED FROM THE TOP OF THE TOILET SEAT TO THE FLOOR. GEORGIA ACCESSIBILITY CODE RULE 120-3-20-.27). FLUSH CONTROLS SHALL BE HAND OPERATED OR AUTOMATIC AND SHALL COMPLY WITH RULE 120-3-20-.38(4) RELATED TO CONTROLS. CONTROLS FOR FLUSH VALVES SHALL BE MOUNTED ON THE WIDE, ACCESSIBLE SIDE OF TOILET AREAS NO MORE THAN 44 IN. ABOVE THE FLOOR.

4. HANDICAP GRAB BARS ARE TO BE LOCATED AS OUTLINED IN GEORGIA ACCESSIBILITY CODE RULE 120-3-20-.37 AND NOT OBSTRUCT THE REQUIRED CLEAR FLOOR AREA. MOUNT AT 33" TO 36" HEIGHT. GRAB BARS SHALL BE MOUNTED TO SUPPORT 250 LBS. PROVIDE BLOCKING AS REQUIRED IN WALLS.

5. HANDICAP ACCESSIBLE URINALS SHALL BE WALL HUNG WITH AN ELONGATED RIM AT A MAXIMUM OF 17 IN. ABOVE THE FLOOR AND SHALL EXTEND AT LEAST 14 IN. FROM THE WALL TO THE FRONT EDGE OF THE URINAL. A CLEAR FLOOR SPACE OF URINALS. (GEORGIA ACCESSIBILITY CODE RULE 120-3-20-.29)

6. HANDICAP LAVATORIES SHALL BE MOUNTED WITH A CLEARANCE OF 29 IN. FROM THE FLOOR TO THE BOTTOM OF THE APRON. PLUMBING SHALL BE ARRANGED SO THAT A KNEE CLEARANCE OF 8 IN. DEEP, TOE CLEARANCE OF 9 IN. HIGH AND A FLOOR SPACE OF 17 IN. MIN. DEPTH IS ACHIEVED TO COMPLY WITH GEORGIA ACCESSIBILITY CODE RULE 120-3-20-.30. TOPS OF COUNTER MOUNTED LAVATORIES SHALL BE NO HIGHER THAN 34 IN. FROM THE FLOOR AND THE LAVATORIES SHALL BE A MAXIMUM OF 6 1/2 IN. DEEP.

7. HOT WATER AND DRAIN PIPES UNDER HANDICAP LAVATORIES SHALL BE INSULATED OR COVERED. NO SHARP OR ABRASIVE SURFACES SHALL BE FOUND UNDER LAVATORIES. (GEORGIA ACCESSIBILITY CODE RULE 120-3-20-.30)

8. ONE HAND OPERATION IS REQUIRED OF HANDICAP FAUCETS, SELF CLOSING VALVES ARE PERMITTED PROVIDING THE FAUCET REMAINS OPEN FOR AT LEAST TEN SECONDS TO COMPLY WITH GEORGIA ACCESSIBILITY CODE RULE 120-3-20-.30(5).

9. HANDICAP MIRRORS ARE TO BE MOUNTED WITH THE BOTTOM EDGE OF REFLECTING SURFACE NO HIGHER THAN 40 IN. FROM THE FLOOR AND THE TOP OF THE FRAME AT LEAST 74 IN. FROM THE FLOOR. GEORGIA ACCESSIBILITY CODE RULE 120-3-20-.30(6)

MEANS OF EGRESS, EXITS, EXIT ACCESS, EMERGENCY EXIT:

1. EGRESS DOORS SHALL HAVE A MINIMUM CLEAR OPENING OF 32" AND SHALL BE ACCESSIBLE PER THE FOLLOWING CRITERIA AND GEORGIA ACCESSIBILITY CODE.

2. PROVIDE ILLUMINATED EXIT SIGNS WITH BATTERY BACKUP DESIGNATING EXITS AND WAYS TO TRAVEL THERETO. SEE ELECTRICAL DRAWINGS.

3. PROVIDE EMERGENCY LIGHTING BATTERY PAKS TO ILLUMINATE THIS FACILITY IN THE EVENT OF A POWER FAILURE. SEE ELECTRICAL DRAWINGS. EMERGENCY LIGHTS SHALL BE CONNECTED TO A LIGHTING CIRCUIT BREAKER FOR THE AREA THEY SERVE. DEDICATED CIRCUITS ARE NOT PERMITTED.

4. ADDITIONAL EXIT & EMERGENCY LIGHTING MAY BE REQUIRED AT THE TIME OF INSPECTION, DUE TO POSSIBLE OBSTRUCTION BY SHELVING EQUIPMENT, ETC.

5. DOORS SHALL BE ARRANGED TO BE READILY OPENED FROM THE EGRESS SIDE WHENEVER THE BUILDING IS OCCUPIED. DOORS IN EXITS SHALL NOT BE SUBJECT TO THE USE OF A KEY, TOOL OR REQUIRE SPECIAL KNOWLEDGE OR EFFORT FOR OPERATION FROM THE EGRESS SIDE (INSIDE) OF THE BUILDING. DOORS WITH THUMB BOLTS ON THE INTERIOR, HOWEVER, SHALL BE TURNED TO THE UNLOCKED POSITION AT ANY TIME THE BUILDING IS OCCUPIED. PER NFPA 101 LIFE SAFTEY CODE, CHAPTER 7, SECTION 7.2.1.5.3, 2018 EDITION.

6. FLOOR ELEVATION CHANGES SHALL BE NO MORE THAN 1/2" AT ANY ONE PLACE ALONG AN ACCESSIBLE ROUTE.

7. ANY FIRE RATED DOORS OR FUSIBLE LINK SHUTTERS SHALL BE USED, INSTALLED AND MAINTAINED PER NFPA 80.

8. BUILDING OCCUPANT SHALL SUPPLY FIRE MARSHALL'S OFFICE WITH A FIXTURE PLAN OF SHELVING, CONVEYOR SYSTEMS, OR MACHINERY LOCATION. SHOW BOTH HORIZONTAL AND VERTICAL VIEWS. PLANS MUST BE SUBMITTED PRIOR TO REQUEST FOR CERTIFICATE OF OCCUPANCY.

9. THE FLOOR ON BOTH SIDES OF A DOOR SHALL BE LEVEL AND SHALL HAVE THE SAME ELEVATION ON BOTH SIDES OF THE DOOR, FOR A DISTANCE ON EACH SIDE AT LEAST EQUAL TO THE WIDTH OF THE WIDEST SINGLE DOOR.

10. ARRANGEMENT OF THE MEANS OF EGRESS PER THE APPROPRIATE OCCUPANCY CHAPTER OF THE NFPA 101 LIFE SAFETY CODE, 2018 EDITION, SHALL BE PROVIDED.

RAMPS, STAIRS, GUARDRAILS & HANDRAILS:

1. STAIRS ARE NOT INCLUDED IN THIS PERMIT APPLICATION.

2. RAMPS SHALL HAVE A MAXIMUM SLOPE OF 1:12 TO MEET THE REQUIREMENTS SET FORTH BY GEORGIA ACCESSIBILITY CODE RULE 120-3-20-.18.

3. RAMP HANDRAILS SHALL COMPLY WITH AND SHALL HAVE THE FEATURES DESCRIBED IN GEORGIA ACCESSIBILITY CODE RULE 120-3-20-.19.

4. PROVIDE STURDY HANDRAILS ON BOTH SIDES OF RAMP. HANDRAILS SHALL BE MOUNTED AT 34" ABOVE RAMP. HAND-RAILS SHALL ALSO COMPLY WITH OTHER REQUIREMENTS OF GEORGIA ACCESSIBILITY CODE RULE 120-3-20-.37 AND NFPA 101, 7.2.2.4.5(1).

5. NEW HANDRAILS SHALL BE EXTENDED HORIZONTALLY A MINIMUM OF 12 IN. AT THE REQUIRED HEIGHT AT LANDINGS. SEE NFPA 101, 7.2.2.4.5(B).

6 NEW HANDRAIL ENDS SHALL BE RETURNED TO WALL. SEE NFPA 101, 7.2.2.4.5(5).

7. NEW HANDRAILS SHALL PROVIDE A CLEARANCE OF AT LEAST 1 1/2 IN. BETWEEN THE HANDRAIL AND THE WALL TO WHICH THEY ARE FASTENED. SEE FPA 101, 7.2.2.4.5(2).

DIVISION 02 - SITE CONSTRUCTION

1. NOT INCLUDED IN PACKAGE PREPARED BY BETA DESIGN GROUP.

DIVISION 03 - CONCRETE

1. NOT INCLUDED IN PACKAGE PREPARED BY BETA DESIGN GROUP.

DIVISION 04 - MASONRY

BRICK VENEER:

1. ALL BRICK SHALL BE OF A QUALITY AT LEAST EQUAL TO THAT REQUIRED BY ASTM C216 FOR SOLID CLAY AND SHALE FACED BRICK, ASTM C902 FOR PAVING BRICK, ASTM C652 FOR CLAY AND SHALE HOLLOW BRICK.

2. ONLY GRADE "SW" BRICK SHALL BE USED ON EXPOSED EXTERIOR BUILDING SURFACES, BOTH ABOVE AND BELOW GROUND.

3. UNLESS NOTED OTHERWISE, ALL BRICK SHALL BE JUMBO UTILITY (NOMINALLY 4"X4"X12") TO MATCH EXISTING.

4. PATTERN SHALL BE STANDARD RUNNING BOND (1/2 LAP) UNLESS OTHERWISE INDICATED.

5. OPEN HEAD JOINTS SHALL BE PROVIDED AT 2'-0" O.C. AT THE BOTTOM COURSE OF VENEER ABOVE FINISH GRADE AND AT LINTELS. OPEN HEAD JOINTS SHALL BE A MINIMUM OF 3/8" WIDE X HEIGHT OF BRICK. OPEN HEAD JOINTS TO BE FITTED WITH TUBE VENTS.

6. FABRIC FLASHING SHALL BE PROVIDED CONTINUOUSLY AT ALL STEEL LINTEL BEAMS. FLASHING SHALL BE RUBBERIZED ASPHALT OR 45 MIL EPDM WITH END DAMS. METAL BASE FLASHINGS, WHERE INDICATED, SHALL BE 28 GA. COPPER, STAINLESS STEEL OR GALVANIZED METAL. IF GALVANIZED MATERIAL IS USED, METAL SHALL BE COATED WITH BITUMINOUS COATING PRIOR TO INSTALLATION. ALUMINUM FLASHINGS SHALL NOT BE USED IN CONTACT WITH WET MORTAR.

7. AN AIR AND WATER BARRIER SHALL BE PLACED BEHIND VENEERS OVER EXTERIOR GYP. SHEATHING HORIZONTALLY WITH THE UPPER LAYER LAPPED OVER THE LOWER LAYER NOT LESS THAN 2". BARRIER SHALL BE FREE OF HOLES AND BREAKS OTHER THAN THOSE CREATED BY FASTENERS.

8. MORTAR REQUIREMENTS PER ASTM C270:
   A) BRICK, EXTERIOR VENEER: TYPE N, 750 PSI AVERAGE COMPRESSIVE STRENGTH AT 28 DAYS WITH WATER RETENTION OF 75% MINIMUM AND AIR CONTENT OF 14% MAXIMUM.
   B) ANY ADMIXTURES TO THE MORTAR MUST CONFORM TO ASTM C476 AND SHALL BE APPROVED BY THE ENGINEER. IN NO CASE SHALL CALCIUM CHLORIDE BE ADDED TO THE MORTAR.
   C) MORTAR USED FOR EXPOSED MASONRY WALLS SHALL CONTAIN NO SOLUBLE SALTS SUCH AS SODIUM OR POTASSIUM SULFATE. USE ONLY POTABLE WATER, PORTLAND CEMENT WITH LOW ALKALI CONTENT AND CHEMICALLY PURE LIME.

9. MASONRY TOLERANCES:
   A) VARIATION FROM PLUMB IN THE LINES AND SURFACES OF WALLS AND COLUMNS: 1/4 IN. IN 10 FT, 3/8 IN. IN ANY STORY OR 20 FT. MAX., 1/2 INCH IN 40 FEET.
   B) VARIATION FROM PLUMB FOR EXTERIOR CORNERS, CONTROL JOINTS AND OTHER CONSPICUOUS LOCATIONS: 1/4 IN. IN 20 FT. OR ANY STORY: 1/2 IN. IN 40 FT. OR MORE.
   C) VARIATION FROM LEVEL AT LINTELS, SILLS, PARAPETS AND HORIZONTAL PROJECTIONS OR INDENTIONS: 1/4 IN. IN 20 FT: 1/2 IN. IN 40 FT OR MORE.
   D) VARIATION FROM LEVEL AT LOCATIONS OTHER THAN ITEM 10C: 1/2 IN. IN 20 FEET: 3/4 IN. IN 40 FEET OR MORE.
   E) VARIATION IN THICKNESS OR WALLS: MINUS 1/4 IN: PLUS 1/2 IN.

10. MASONRY CONTROL JOINTS SHALL BE PROVIDED AT APPROXIMATELY 32 FT. ON CENTER, UNLESS NOTED OTHERWISE ON PLANS. DO NOT LOCATE JOINTS OVER LINTELS OR AT BUILDING CORNERS.

11. BRICK TIES:
   A) TWO PIECE ADJUSTABLE TIES WITH A MINIMUM WIRE SIZE OF W1.7 WITH A DIAMETER OF 0.1483 IN. SHALL BE USED AT BRICK VENEER, COMPATIBLE WITH MASONRY.
   B) ALL TIES MUST BE EMBEDDED AT LEAST 1 1/2" INTO THE BRICK VENEER WITH A MIN. MORTAR COVER OF 5/8" TO THE OUTSIDE FACE OF THE WALL.
   C) TIES SHALL BE SPACED AT 16 IN. ON CENTER VERTICALLY AND 24 IN.(MAXIMUM) ON CENTER HORIZONTALLY (MATCH STUD SPACING) IN THE FIELD OF THE WALL. AT OPENINGS, ADDITIONAL TIES SHALL BE SPACED WITHIN 12" OF THE OPENING.

12. BRICK SHALL BE CLEANED ACCORDING TO THE RECOMMENDATIONS OF "CLEANING BRICK MASONRY", BRICK INSTITUTE OF AMERICA TECHNICAL NOTE NO. 20, LATEST EDITION.

DIVISION 05 - STRUCTURAL STEEL, STEEL JOISTS, STEEL DECKING

1. NOT INCLUDED IN PACKAGE PREPARED BY BETA DESIGN GROUP.

DIVISION 06 - WOOD AND PLASTICS

GENERAL:

1. ANY WOOD USED (BLOCKING, ETC.) SHALL BE FIRE RETARDANT TREATED.

CABINETS:

1. CABINETS SHALL BE CONSTRUCTED WITH PARTICLE BOARD CORE WITH WHITE MELAMINE INTERIORS.

2. CABINET EXTERIORS SHALL BE HIGH PRESSURE LAMINATE. TOPS SHALL BE SELF-EDGE CONSTRUCTION.

3. HINGES SHALL BE 110 DEGREE, CONCEALED, SELF-CLOSING HINGES.

4. BACKS SHALL BE 1/4" WHITE VINYL COATED PLYWOOD DADOED INTO SIDES, TOP AND BOTTOM.

5. DRAWER CONSTRUCTION SHALL BE 3/4" MELAMINE SIDES, BACK AND SUB FRONT.DRAWER BOTTOM SHALL BE 1/4" VINYL COATED PLYWOOD.

6. DRAWER SLIDES, IF REQUIRED, SHALL BE BOTTOM MOUNTED, EPOXY COATED WITH 100 LB. STATIC LOAD CAPACITY.

7. EXPOSED AND SEMI-EXPOSED CABINET EDGES SHALL BE BANDED WITH .5MM PVC IN A COMPLIMENTARY COLOR TO MATCH LAMINATE.

8. TOE KICKS SHALL BE CONSTRUCTED OF EXTERIOR GRADE PLYWOOD.

DIVISION 07 - THERMAL & MOISTURE PROTECTION

INSULATION:

1. INSULATING MATERIALS, INCLUDING FACINGS SUCH AS VAPOR RETARDERS, VAPOR-PERMEABLE MEMBRANES, SIMILAR COVERINGS AND ALL LAYERS OF SINGLE AND MULTILAYER REFLECTIVE FOIL INSULATIONS SHALL HAVE A FLAME SPREAD INDEX OF NOT MORE THAN 25 AND A SMOKE-DEVELOPED INDEX OF NOT MORE THAN 450, TESTED PER ASTM E-84.

2. CONCEALED BUILDING INSULATION INSTALLED IN WALL, FLOOR, ROOF AND CEILING CAVITIES SHALL HAVE A FLAME SPREAD INDEX OF NOT MORE THAN 25 AND SMOKE-DEVELOPED INDEX OF NOT MORE THAN 450, TESTED PER ASTM E-84.

3. PROVIDE 3 1/2 INCH, UNFACED FIBERGLASS ACOUSTICAL INSULATION BATTS ABOVE ALL CEILINGS LOCATED DIRECTLY UNDER BUILDING ROOF.

4. PROVIDE SOUND ATTENUATION BATTS AT TOILET WALLS, CONFERENCE ROOM WALLS AND BREAKROOM WALLS. SEE DRAWINGS FOR OTHER LOCATIONS OF SOUND INSULATED WALLS.

5. ROOF INSULATION SHALL BE OF A TYPE APPROVED BY THE ROOF MANUFACTURER FOR THIS TYPE OF INSTALLATION. ROOF INSULATION SHALL COMPLY WITH FM 4450 OR UL 1256 AND SHALL HAVE A MINIMUM LTTR VALUE OF 25.

6. SEE THE DRAWINGS FOR WALL INSULATION LOCATIONS, TYPE AND MIN. R-VALUES.

FLASHING & ACCESSORIES:

1. SHEET METAL FLASHINGS SHALL BE FABRICATED FROM 26 GUAGE GALVANIZED STEEL.

2. ALL HEADS OF EXPOSED EXTERIOR FASTENERS SHALL BE 300 SERIES STAINLESS, NYLON, PAINTED OR CAST ZINC/ALUMINUM TO PREVENT STAINING OF BUILDING SURFACES.

SEALANTS:

1. ALL SEALANT PRODUCTS SHALL BE VALIDATED BY THE SEALANT, WATERPROOFING AND RESTORATION INSTITUTE AND COMPLY WITH ASTM C920 AND C1589.

2. CONTRACTOR SHALL USE A ONE-PART POLYURETHANE SEALANT FOR SEALING PENETRATIONS AND FLASHING CONDITIONS ON METAL STANDING SEAM ROOF SYSTEM, SONOLASTIC NP-1 BY MASTERSEAL OR EQUAL. DO NOT USE SILICONE SEALANTS.

3. EXTERIOR JOINTS AND ALL OTHER OPENINGS IN THE BUILDING ENVELOPE THAT ARE SOURCES OF AIR LEAKAGE SHALL BE CAULKED, GASKETED, WEATHER-STRIPPED OR OTHERWISE SEALED IN AN APPROVED MANNER.

4. EQUIPMENT OR PIPING SHIMS SHALL BE MADE OF PLASTIC OR COMPOSITE MATERIAL AND SET IN A BED OF TAPE MASTIC TO PREVENT MOISTURE FROM ACCUMULATING UNDER THE BLOCKING.

5. FIRESTOP COMPOUNDS FOR JOINT SYSTEMS BETWEEN FRE-RESISTANCE-RATED WALLS, FLOOR OR FLOOR/CEILING ASSEMBLIES SHALL BE LISTED AND TESTED UNDER UL 2079 OR ASTM E1966 - TEST STANDARD FOR FIRE-RESTIVE JOINT SYSTEMS. FOR WALL OR CEILING PENETRATIONS, THE FIRESTOP MATERIAL MUST CARRY A UL 1479 OR ASTM E814 - FIRE TESTS OF PENETRATION FIRESTOP SYSTEMS LISTING AND BE DESIGNED TO RESIST THE PASSAGE OF FIRE FOR A TIME PERIOD NOT LESS THAN THE REQUIRED FIRE-RESISTANCE RATING OF THE WALL, FLOOR OR ROOF IN OR BETWEEN WHICH THE SYSTEM IS INSTALLED.

VAPOR BARRIER:

1. PLACE 6 MIL POLYETHYLENE VAPOR BARRIER UNDER ALL BUILDING SLABS ON GRADE, LAP 6" MINIMUM AND TAPE SEAM. SEAL/TAPE ALL SLAB PENETRATIONS.

DIVISION 08 - DOORS AND WINDOWS

GENERAL:

1. THE U-FACTOR AND SHGC FOR EACH GLAZED FENESTRATION PRODUCT (DOOR, WINDOW, SKYLIGHT) SHALL BE DETERMINED IN ACCORDANCE WITH THE NATIONAL FENESTRATION RATING COUNCIL PER NFRC 100-01 (PROCEDURE FOR DETERMINING FENESTRATION PRODUCT U-FACTORS) AND NFRC 200-01 (PROCEDURE FOR DETER-MINING FENESTRATION PRODUCT SOLAR HEAT GAIN COEFFICIENTS AND VISIBLE TRANSMITTANCE AT NORMAL INCIDENCE).

DOOR CRITERIA:

1. EXTERIOR ENTRANCE DOORS AT OFFICE AREA SHALL BE GLASS AND ALUMINUM DOORS WITH LOCKSETS AT EXTERIOR, THUMB LOCKS ON INTERIOR FACE, CLOSERS AND THRESHOLDS. THE LOCK SHALL BE SUCH THAT IT IS EASILY DISTINGUISHED AS LOCKED. A SIGN SHALL BE PLACED ON EGRESS SIDE OF DOOR, EITHER ON OR ADJACENT TO THE DOOR, WITH 1" LETTERS ON A CONTRASTING BACKGROUND AND SHALL READ "THIS DOOR IS TO REMAIN UNLOCKED WHEN THE BUILDING IS OCCUPIED."

2. VERTICAL ACTING SECTIONAL STEEL INSULATED DOORS SHALL BE 24 GUAGE STEEL DOOR WITH FULL VERTICAL LIFT. DOORS SHALL BE FACTORY PAINTED. PROVIDE ONE SIGHT GLASS IN EACH DOOR. ALL OVERHEAD DOORS SHALL BE MANUALLY OPERATED, UNLESS NOTED OTHERWISE ON DOOR SCHEDULE.

3. EXTERIOR HOLLOW METAL DOORS SHALL BE 18 GUAGE GALVANIZED COLD ROLLED STRETCHER LEVELED STEEL. ALL HOLLOW METAL DOOR FRAMES SHALL BE 16 GUAGE GALVANIZED STEEL. PROVIDE LOCKSETS OR PANIC HARDWARE (SEE SCHEDULE), THRESHOLDS AND CLOSERS ON ALL EXTERIOR METAL PERSONNEL DOORS.

4. MAXIMUM ALLOWABLE AIR INFILTRATION RATES FOR ALL EXTERIOR DOORS AND WINDOWS SHALL BE AS FOLLOWS:
   A) DOORS - 1.25 CU. FT. PER MINUTE PER SQUARE FOOT OF DOOR AREA.
   B) FIXED ALUMINUM WINDOWS - .15 CU. FT. PER MINUTE PER SQUARE FOOT OF WINDOW AREA.

5. EACH SOLID EXTERIOR DOOR SHALL HAVE A U-VALUE NOT TO EXCEED .50 AND SHALL BE LABELED BY THE MANUFACTURER TO CERTIFY COMPLIANCE WITH THE REQUIREMENTS OF THE NATIONAL FENESTRATION RATING COUNCIL PER NFRC 100-97, TO BE VERIFIED BY THE INSPECTOR.

6. EXTERIOR GLASS DOORS SHALL HAVE A SHGC RATING NOT TO EXCEED .50, DETERMINED IN ACCORDANCE WITH THE NATIONAL FENESTRATION RATING COUNCIL PER NFRC 200-97.

7. SEE THE DOOR SCHEDULE IN THESE DRAWINGS FOR OTHER CRITERIA CONCERNING DOORS AND FRAMES.

HARDWARE:

1. A LATCH OR OTHER FASTENING DEVICE ON A DOOR SHALL BE PROVIDED WITH A HANDLE, PANIC BAR OR OTHER SIMPLE TYPE OF RELEASING DEVICE HAVING AN OBVIOUS METHOD OF OPERATION UNDER ALL LIGHTING CONDITIONS. LATCH SHALL BE NO MORE THAN 48" ABOVE FINISHED FLOOR. DOORS SHALL BE OPERABLE WITH NO MORE THAN ONE RELEASING OPERATION.

2. THRESHOLDS SHALL BE NO HIGHER THAN 1/2" ABOVE FINISH FLOOR. THE EDGE SHALL BE BEVELED WITH A SLOPE NO GREATER THAN 1 IN 2.

3. SWING AND FORCE TO OPEN DOORS SHALL MEET THE REQUIREMENTS OF THE NFPA 101 LIFE SAFETY CODE, CHAPTER 7, SECTION 7.2. 1.4, 2018 EDITION. THE FORCES REQUIRED TO FULLY OPEN ANY DOOR MANUALLY IN A MEANS OF EGRESS SHALL NOT EXCEED 15 LBF TO RELEASE THE LATCH, 30 LBF TO SET THE DOOR IN MOTION AND 15 LBF TO OPEN THE DOOR TO THE MINIMUM REQUIRED WIDTH. OPENING FORCES FOR INTERIOR SINGLE-HINGED OR PIVOTED-SWING-ING DOORS WITHOUT CLOSERS SHALL NOT EXCEED 5 LBF. THESE FORCES SHALL BE APPLIED AT THE LATCH STILE.

4. SELF CLOSING DEVICES SHALL MEET THE REQUIREMENTS OF THE NFPA 101 LIFE SAFETY CODE, CHAPTER 7, SECTION 7.2. 1.4, 2018 EDITION.

5. FINISH HARDWARE TO BE BRUSHED CHROME FINISH OF MEDIUM INDUSTRIAL GRADE. CONTRACTOR SHALL SUBMIT FINISH HARDWARE SCHEDULE FOR OWNER'S REVIEW AND APPROVAL. PROVIDE MEDIUM DUTY CLOSERS ON ALL EXTERIOR PERSONNEL, MULTI-USER TOILET AND FIRE RATED DOORS.

GLAZING:

1. ALL GLASS IN ENTRANCE DOORS SHALL BE TEMPERED.

2. EXTERIOR GLASS SHALL BE ONE INCH THICK SOLAR BRONZE INSULATED GLASS WITH LOW-E COATING ON SURFACE NO. 3, MAXIMUM WINTER U-VALUE NOT TO EXCEED .35 (R-2.85 MIN.), UNLESS NOTED OTHERWISE.

3. EXTERIOR GLASS SHALL HAVE A SHGC RATING NOT TO EXCEED .35.

4. ALUMINUM FRAMES SHALL BE BRONZE ANODIZED ALUMINUM. SYSTEM SHALL BE CAPABLE OF WITHSTANDING UNIFORM PRESSURE OF 20 PSF INWARD AND 20 PSF OUTWARD.

5. PROVIDE SAFETY GLASS AS REQUIRED BY SECTION 2406 OF 2018 INTERNATIONAL BUILDING CODE. AT LOCATIONS WHERE GLASS IS WITHIN 18" OF FLOOR, PROVIDE 1 1/2" WIDE CONTINUOUS GUARDRAIL TO WINDOW FRAMES. COLOR TO MATCH ALUMINUM FRAMING AND CENTERLINE OF BAR TO BE 36" A.F.F. GUARDRAIL TO WITHSTAND 50 PLF WITHOUT CONTACTING GLASS.

DIVISION 09 - FINISHES

CEILINGS:

1. PROVIDE ACOUSTICAL CEILING SUSPENSION SYSTEM AND ACOUSTICAL TILE AS NOTED ON FINISH SCHEDULES.

2. TYPICAL CEILING TILES SHALL BE ARMSTRONG CORTEGA 816 WHITE, 2' X 2' ANGLED TEGULAR TILE UNLESS NOTED OTHERWISE ON FINISH SCHEDULE.

3. CEILING TILES IN KITCHEN AREA TO BE ARMSTRONG KITCHEN ZONE 673 WHITE, 2' X 2' SQUARE EDGE VINYL CLAD TILES.

4. CEILINGS SHALL BE INSTALLED FOLLOWING MANUFACTURER'S RECOMMENDATIONS AND TO ASTM C 635 AND ASTM C 636. SPECIFICATIONS CALL FOR 12 GA. HANGER WIRES AT 4'-0" O.C. MAXIMUM SPACING.

PAINT:

1. PROVIDE A THREE YEAR GUARANTEE ON ALL EXTERIOR PAINTED SURFACES AGAINST FADING, PEELING, OR SPALLING.

2. ALL OFFICE WALLS SHALL RECEIVE TWO COATS OF FLAT LATEX PAINT UNLESS NOTED OTHERWISE. ANY WALLS THAT RECEIVE SEMI-GLOSS OR GLOSS PAINT SHALL BE TREATED FIRST WITH U.S. GYPSUM "FIRST-COAT" BY PAINTING CONTRACTOR AND ALLOWED TO THOROUGHLY DRY PRIOR TO PAINTING OF WALLS.

FLOOR COVERING:

1. CARPET SHALL BE INSTALLED AS NOTED ON FINISH SCHEDULE. CARPET TO BE DIRECT GLUE-DOWN, 22 OZ. LEVEL LOOP OR 30 OZ. CUT PILE WITH A PILE HEIGHT NO GREATER THAN 1/2". EXPOSED EDGES OF CARPET SHALL BE FASTENED TO FLOORING AND HAVE TRIM ALONG THE ENTIRE LENGTH OF EXPOSED EDGE. INSTALLED CARPET ALLOWANCE SHALL BE $16.00 PER SQUARE YARD.

2. LUXURY VINYL TILE SHALL BE INSTALLED PER MANUFACTURER'S RECOMMENDATIONS. FILL CONCRETE JOINTS AND TREAT FOR CRACK CONTROL BY USING ANTIFRACTURE MEMBRANE (MAPEI PRP-M19 OR EQUAL) PRIOR TO TILE PLACEMENT.

3. CARPETED AND L.V.T. AREAS SHALL RECEIVE 4" HIGH, GROUP 1, TYPE TP (THERMOPLASTIC) RUBBER, STANDARD TOE, COVE BASE SHALL COMPLY WITH STANDARD SPECIFICATION ASTM F-1861.

4. CERAMIC OR QUARRY TILE SHALL BE INSTALLED IN ACCORDANCE WITH METHODS, INCLUDING DETAILS, JOINTS) AS DESCRIBED IN THE TILE COUNCIL OF AMERICA "HANDBOOK FOR CERAMIC TILE INSTALLATION" AND REFERENCED ANSI STANDARDS FOR TILE AND GROUT TYPE.

5. CERAMIC TILE SHALL BE SET WITH ONE-STEP MORTAR FORMULATED WITH A POLYMER ADDITIVE FOR CRACK ISOLATION.

DIVISION 10 - SPECIALTIES

TOILET ACCESSORIES:

1. PROVIDE FLOOR-MOUNTED, HEADRAIL-BRACED HDPE TOILET PARTITIONS AS INDICATED ON PLANS. AT HANDICAP ACCESSIBLE TOILET, PROVIDE STANDARD 5'-0" X 5'-0" (CLEAR DIMENSIONS) STALL TOGETHER WITH ANCILLARY ITEMS AS REQUIRED BY GEORGIA ACCESSIBILITY CODE RULE 120-3-20-.28. PROVIDE URINAL SCREEN AS REQUIRED. EACH STALL SHALL BE PROVIDED WITH ONE DOUBLE ROLL TISSUE HOLDER IN HANDICAP STALLS, MOUNT TISSUE HOLDER WITH CENTER OF ROLL AT 19" ABOVE FINISH FLOOR.

2 INSTALL PLATE GLASS MIRROR OVER EACH VANITY WITH LENGTH EQUAL TO VANITY LENGTH. AT SINGLE WALL-HUNG LAVATORY LOCATIONS, PROVIDE ONE 18" X 36" WALL MIRROR.

3. FIXTURES TO BE PROVIDED, SEE PLAN FOR LOCATION(S):
   TOILET PAPER HOLDER, DOUBLE - ASI 0030
   36" GRAB BAR, 1 1/2" DIA. - ASI 3700 SERIES
   42" GRAB BAR, 1 1/2" DIA. - ASI 3700 SERIES
   SOAP DISPENSER, COUNTER MOUNT - ASI 0332-D
   SOAP DISPENSER, WALL MOUNT - ANSI 0347
   COAT HOOK - ASI 0714
   PAPER TOWEL DISPENSER - ASI 0210
   MIRROR (18" X 36") - ASI 0620-1836

FIRE EXTINGUISHERS:

1. ANALYZE EXISTING BUILDING FOR FIRE EXTINGUISHER LOCATIONS. PROVIDE 2-A:10-B:C 5 LB. FIRE EXTINGUISHERS IN THE OFFICE TYPE AREAS. UNITS TO BE LARSEN MP5 AND SHALL BE MOUNTED WHERE READILY VISIBLE AND ACCESSIBLE. PORTABLE FIRE EXTIN-GUISHERS ARE TO BE PROVIDED AT 1 UNIT FOR 3000 S.F.

ALPHA BLDG SET 08-27-2024

phase two, for construction

© BETA DESIGN GROUP, INC. 2024 This drawing may be utilized only for the purpose of constructing or installing the work shown thereon at the site of the work specified. Any other use of this drawing, including without limitation any reproduction or alteration of this drawing, without the prior written approval of Beta Design Group, Inc. is prohibited.

STATE OF GEORGIA
E. MICHAEL SHACKLEY
06/28/2024
CERTIFICATE NO. 7718
REGISTERED ARCHITECT

Beta Design Group, Inc.
Architecture
2118 Rosser Place Stone Mountain, GA. 30087
Phone: 770 491 9250
Email: mikes@betadesigngroup.com

Client:
SUNBELT BUILDERS™
10641 HWY 6 COVINGTON GA 30014 t 770 786 0 1 770 786 046

Project:
R. L. COUSINS COMMUNITY CENTER
NEWTON CO. BOC RFP #24-04
8134 GEIGER STREET, N.W.
COVINGTON, GEORGIA

Issue Date:	Initial:	Drwg. Revision Description:

Project No.: 2023012
Drwg. Date: 06/28/24
Drwg. Revision:
Drawn By: B.D.G.
Checked By: E.M.S.
File Name: 2023012 A-0.3

Sheet Title:
GEN. NOTES & SPECS.

Sheet No.:
A-0.3

(ORDINARY HAZARD, 2 X 1500 S.F.) AND MAXIMUM TRAVEL DISTANCE TO BE 75 FT.

1. COMMERCIAL KITCHENS SHALL HAVE A CLASS K FIRE EXTINGUISHER.

2. PORTABLE FIRE EXTINGUISHERS HAVING A GROSS WEIGHT NOT EXCEEDING 40 LBS. SHALL BE INSTALLED SO THAT ITS TOP IS NO HIGHER THAN 54" AND NOT LESS THAN 48" ABOVE THE FLOOR. HAND-HELD PORTABLE FIRE EXTINGUISHERS HAVING A GROSS WEIGHT EXCEEDING 40 LBS. SHALL BE INSTALLED SO THAT ITS TOP IS NOT MORE THAT 3.5 FEET (42") ABOVE THE FLOOR. THE CLEARANCE BETWEEN THE FLOOR AND THE BOTTOM OF THE INSTALLED HAND-HELD EXTINGUISHERS SHALL NOT BE LESS THAN 4".

4. OWNER SHALL BE RESPONSIBLE FOR ADDITIONAL REQUIREMENTS AFTER ANY FIXTURES, RACKING, EQUIPMENT, ETC. ARE PLACED IN THE BUILDING.

DIVISION 11 - EQUIPMENT
1. NOT INCLUDED IN PACKAGE PREPARED BY BETA DESIGN GROUP.

DIVISION 12 - FURNISHINGS
1. NOT INCLUDED IN PACKAGE PREPARED BY BETA DESIGN GROUP.

DIVISION 13 - SPECIAL CONSTRUCTION
METAL BUILDING:
1. METAL BUILDING ROOF PANELS SHALL BE 3" HIGH, 24 GA. STANDING SEAM METAL ROOF PANELS BY METAL BUILDING MANUFACTURER, GALVALUME FINISH.

2. METAL PANELS SHALL BE INSTALLED PER MANUFACTURER'S RECOMMENDATIONS.

3. CLEAN ALL METAL SHAVINGS, SCREWS AND GENERAL CONSTRUCTION DEBRIS FROM ROOF.

DIVISION 14 - CONVEYING SYSTEMS
1. NOT INCLUDED IN PACKAGE PREPARED BY BETA DESIGN GROUP.

DIVISION 15 - MECHANICAL
1. NOT INCLUDED IN PACKAGE PREPARED BY BETA DESIGN GROUP.

PLUMBING, PLUMBING ACCESSORIES, ANSI PLUMBING:
1. NOT INCLUDED IN PACKAGE PREPARED BY BETA DESIGN GROUP.

FIRE PROTECTION:
1. MAINTAIN ACCESS FOR EMERGENCY VEHICLES AROUND AND TO ALL BUILDINGS UNDER CONSTRUCTION I.E., IN TIMES OF RAIN OR MUD, ROADS SHALL BE ABLE TO CARRY A FIRE TRUCK BY BEING PAVED OR HAVING A CRUSHED STONE BASE, ETC. THIS ACCESS SHALL BE WITHIN 40 FT. OF THE FIRE DEPARTMENT RISER CONNECTION(S).

2. HYDRANT(S) AND MAIN(S) SHALL BE INSTALLED AND UNDER PRESSURE BEFORE ANY COMBUSTIBLE CONSTRUCTION IS STARTED.

3. OPENINGS THROUGH FLOORS, SUCH AS STAIRWAYS, ELEVATOR HOISTWAYS, AND SHAFTWAYS USED FOR LIGHT, VENTILATION OR BUILDING SERVICES, SHALL BE ENCLOSED WITH FIRE BARRIERS (VERTICAL) SUCH AS WALL OR PARTITION ASSEMBLIES. SUCH ENCLOSURES SHALL BE CONTINUOUS FROM FLOOR TO FLOOR. OPENINGS SHALL BE PROTECTED AS A FPROPRIATE FOR THE FIRE RESISTANCE RATING OR THE BARRIER.

4. WHERE A BEAM OR COLUMN BECOMES PART OF A FIRE RATED WALL OR CEILING IT MUST BE PROTECTED AND BE FIRE RATED AS IS THE WALL OR CEILING.

5. ALL PENETRATIONS, SUCH AS PIPES, CONDUITS, BUS DUCTS, CABLES, WIRES, AIR DUCTS, PNEUMATIC DUCTS, AND SIMILAR BUILDING SERVICE EQUIPMENT THROUGH ANY RATED FIRE BARRIER ASSEMBLY SHALL BE TIGHTLY SEALED USING AN APPROVED, LISTED MATERIAL AND SYSTEM THAT IS TESTED AND COMPLYING WITH ASTM E-814 OR UL 1479 FOR FIRE RATING (TO BE USED AT ALL FIRE BARRIERS). SIGNS OR STENCILS SHALL BE PLACED ABOVE ALL CEILING LINES AND CONCEALED SPACES WITH THE WORDING "FIRE AND SMOKE BARRIER - PROTECT ALL OPENINGS." SPACING OF SIGNS TO BE 10'-0" MAXIMUM. LETTERS TO BE 2" MIN. HIGH AND HAVE A CONTRASTING BACKGROUND.

6. FINISH MATERIALS SHALL COMPLY WITH CHAPTER 8 OF 2018 INTERNATIONAL BUILDING CODE AND NFPA 101, 102, I.E. SMOKE DEVELOPED AND FLAMESPREAD. PROVIDE VERIFICATION THAT PRODUCTS COMPLY WITH THE REQUIREMENTS. ANY COMBUSTIBLE INTERIOR TRIM (WOOD WALL PANELING, CARPET, ETC.) IN EXIT ENCLOSURES AND EXIT WAYS (CORRIDORS) SHALL BE OF CLASS "A" OR "B" MATERIALS WITH A FLAMESPREAD RATING OF 0-75 AND A SMOKE DEVELOPMENT RATING OF LESS THAN 450. INTERIOR FLOOR FINISHES IN CORRIDORS AND EXITS SHALL BE CLASS I OR CLASS II PER NFPA 253.

7. COMBUSTIBLE INTERIOR FINISH PRODUCTS SHALL COMPLY WITH THE REQUIREMENTS OF THE RESPECTIVE OCCUPANCY CHAPTER OF THE NFPA 101 LIFE SAFETY CODE, 2018 EDITION AND VERIFICATION SHALL BE PROVIDED.

8. THE NUMERICAL STREET ADDRESS IS EXISTING.

9. CONSTRUCTION SHALL HAVE A FIRE RESISTANCE RATING EQUAL TO OR GREATER THAN THE FIRE RESISTANCE RATING OF ALL CONSTRUCTION WHICH IT SUPPORTS.

10. A KEY LOCK BOX IS REQUIRED PER COVINGTON CITY ORDINANCE. THE FIRE INSPECTOR WILL DETERMINE THE APPROPRIATE LOCATION FOR THE BOX DURING THE 50% INSPECTION. GENERALLY THESE BOXES ARE LOCATED 6 FEET ABOVE GRADE TO THE RIGHT OF THE MAIN ENTRY DOOR. CONTACT THE FIRE MARSHAL'S OFFICE FOR ORDER FORM INFORMATION AND LOCATIONS OF BOX(S).

FIRE SPRINKLER SYSTEM AND ALARM:
1. FIRE PROTECTION SYSTEM DESIGN AND DRAWINGS SHALL BE PREPARED BY THE SUCCESSFUL BIDDING SUBCONTRACTOR AND SHALL SUBMIT ONE SET OF DRAWINGS TO THE ARCHITECT/ ENGINEER FOR USE IN COORDINATION. DESIGN SHALL MEET ALL APPLICABLE CODES AND IT SHALL BE THE CONTRACTOR'S RESPONSIBILITY TO DETERMINE LOCAL INTERPRETATIONS BY THE ENFORCING AGENCY.

2. FIRE SPRINKLER CONTRACTOR SHALL OBTAIN A SEPARATE PERMIT FROM THE CITY FIRE MARSHAL'S OFFICE PRIOR TO INSTALLATION. ANY FIRE SPRINKLER PLAN INCLUDED IN THIS SET OF PLANS IS FOR REFERENCE ONLY, NOT FOR PERMIT.

3. FIRE SPRINKLER SYSTEM SHALL BE DESIGNED AND PROVIDED IN ACCORDANCE WITH THE CITY FIRE PREVENTION AND PROTECTION ORDINANCE, 2018 EDITION AND NFPA 13, 2019 EDITION. THE SPRINKLER SYSTEMS SHALL BE OFF-SITE MONITORED OR AT A CONSTANTLY ATTENDED LOCATION BY TRAINED PERSONNEL.

4. PROVIDE FIRE MARSHAL'S OFFICE WITH A COMPLETE SET OF SPRINKLER/STANDPIPE PLANS TO INCLUDE SITE PLAN WITH HYDRANT LOCATIONS, FIRE DEPARTMENT CONNECTION, AND BUILDING/SPRINKLER LAYOUT. SPRINKLER SHOP DETAILS SHOWING PIPING LOCATIONS AND HEAD LAYOUT SHALL BE AVAILABLE ON THE JOB SITE AT ALL TIMES.

5. THE REQUIRED FIRE ALARM SHALL SOUND AN AUDIBLE AND VISUAL ALARM SIGNAL THROUGHOUT THE FACILITY, INCLUDING COMMON USE ROOMS OR SPACES, RESTROOMS, LOBBIES, CORRIDORS AND CONFERENCE ROOMS. FEATURES OF SIGNALS SHALL COMPLY WITH GEORGIA ACCESSIBILITY CODE RULE 120-3-20-.39, NFPA 72, 2018 EDITION AND NFPA 101, SECTION 9.6.

1. FIRE ALARM CONTRACTOR SHALL OBTAIN A FIRE ALARM SYSTEM PERMIT FROM THE CITY FIRE MARSHAL'S OFFICE PRIOR TO INSTALLATION. ANY FIRE ALARM PLANS INCLUDED IN THIS SET OF PLANS ARE FOR REFERENCE ONLY. NOT FOR PERMIT. FIRE ALARM PLANS AND SPECIFICATIONS SHALL BE SUBMITTED SEPARATELY FOR REVIEW.

2. FIRE ALARM PLANS AND SPECIFICATIONS SHALL COMPLY WITH PROVISIONS OF NFPA 72, 2018 EDITION AND SHALL BE SUBMITTED SEPARATELY FOR REVIEW.

SEISMIC RESTRAINTS:
1. ALL ARCHITECTURAL, MECHANICAL AND ELECTRICAL BUILDING COMPONENTS SHALL BE INSTALLED AND ATTACHED TO THE BUILDING TO RESIST THE SEISMIC DESIGN FORCES SPECIFIED PER ASCE/ SEI 7-10 SECTION 13.2 UNLESS EXEMPTED AS LISTED IN ASCE/ SEI 7-10 SECTION 13.1.4.

DIVISION 16 - ELECTRICAL
1. NOT INCLUDED IN PACKAGE PREPARED BY BETA DESIGN GROUP.

ALPHA BLDG SET 08-27-2024

phase one, for construction

© BETA DESIGN GROUP, INC. 2024 This drawing may be utilized only for the purpose of constructing or installing the work shown thereon at the site of the work specified. Any other use of this drawing, including without limitation any reproduction or alteration of this drawing, without the prior written approval of Beta Design Group, Inc. is prohibited.

STATE OF GEORGIA
E. MICHAEL SHULER
EXPIRES 30 JUNE 2025
CERTIFICATE NO. 025-025
REGISTERED ARCHITECT

Beta Design Group, Inc.
Architecture
2118 Rosser Place Stone Mountain, GA. 30087
Phone: 770.491.9250
Email: mikes@betadesigngroup.com

Client:
SUNBELT BUILDERS™
10841 HWY 9 CUMMING GA 30014 / 770.886.0101 770.886.046

Project:
R. L. COUSINS COMMUNITY CENTER
NEWTON CO. BOC RFP #24-04
8134 GEIGER STREET, N.W.
COVINGTON, GEORGIA

Issue Date:	Initial:	Drwg. Revision Description:

Project No.: 2023012
Drwg. Date: 06/28/24
Drwg. Revision:
Drawn By: B.D.G.
Checked By: E.M.S.
File Name: 2023012 A-0.4

Sheet Title:
GEN. NOTES & SPECS.

Sheet No.:
A-0.4

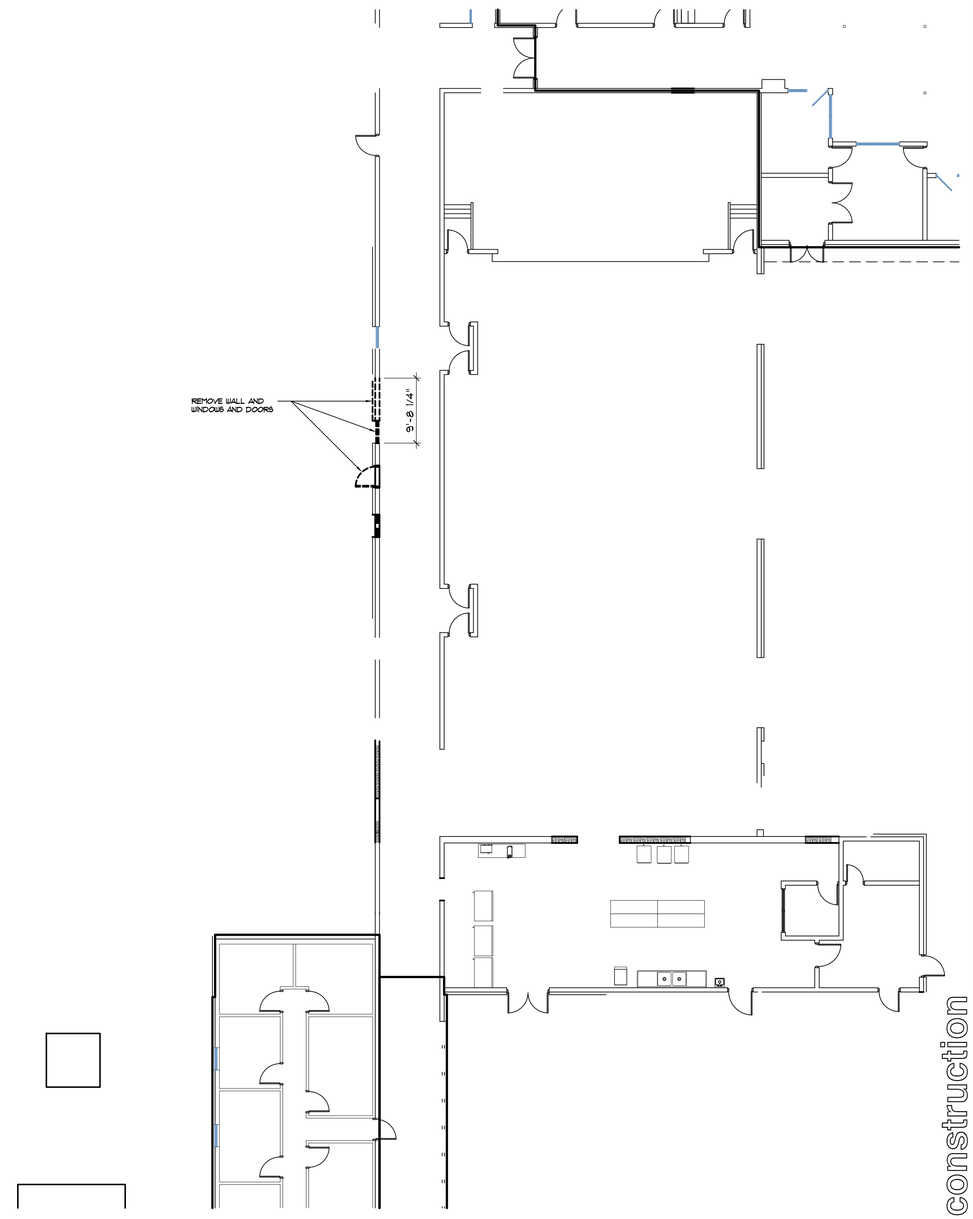

WING B (PHASE 2)
DEMOLITION PLAN

1

3/32" = 1'-0"

NORTH

ALPHA BLDG SET 08-27-2024

phase two, for construction

© BETA DESIGN GROUP, INC. 2024 This drawing may be utilized only for the purpose of constructing or installing the work shown thereon at the site of the work specified. Any other use of this drawing, including without limitation any reproduction or alteration of this drawing, without the prior written approval of Beta Design Group, Inc. is prohibited.

Client:
SUNBELT BUILDERS™
10841 HWY 9 CONYERS GA 30014 770 388 0101

Project:
R. L. COUSINS COMMUNITY CENTER
NEWTON CO. BOC RFP #24-04
8134 GEIGER STREET, N.W.
COVINGTON, GEORGIA

Issue Date:	Initial:	Drwg. Revision Description:

Project No.: 2023012
Drwg. Date: 06/28/24
Drwg. Revision:
Drawn By: B.D.G.
Checked By: E.M.S.
File Name: 2023012A-1.0.4

Sheet Title:
WING B DEMO. PLAN

Sheet No.:
A-1.0.4

Beta Design Group, Inc.
Architecture
2118 Rosser Place Stone Mountain, GA. 30087
Phone: 770 491 9250
Email: mikes@betadesigngroup.com

STATE OF GEORGIA
E. Michael Shultz
E. MICHAEL SHULTZ
CERTIFICATE NO. 21-018
REGISTERED ARCHITECT

ALPHA BLDG SET 08-27-2024

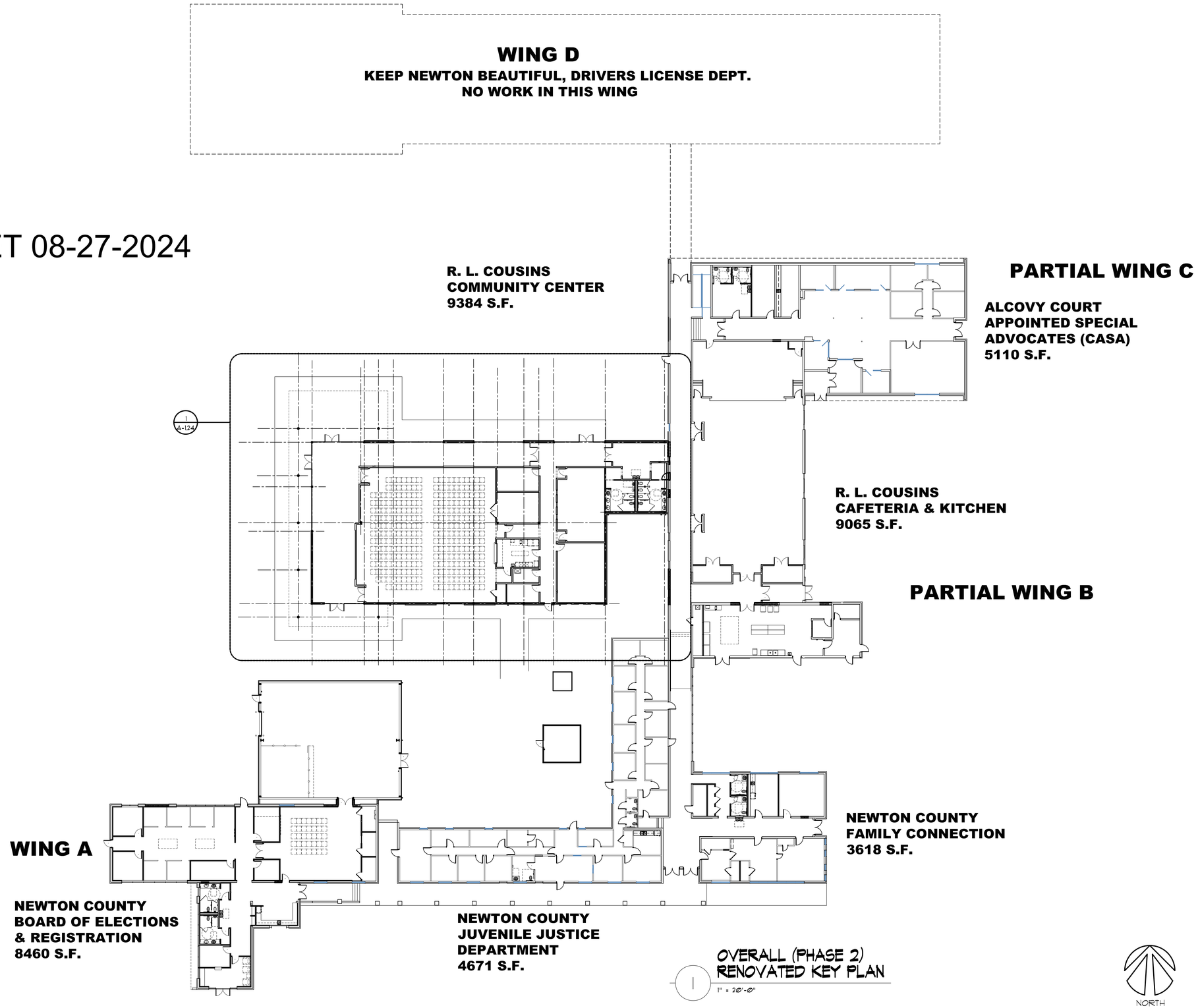

OVERALL (PHASE 2)
RENOVATED KEY PLAN

1" = 20'-0"

phase two, for construction

STATE OF GEORGIA
E. Lynne Shuler
E. LYNNE SHULER
REGISTERED ARCHITECT
CERTIFICATE NO.

Beta Design Group, Inc.
Architecture
2118 Rosser Place Stone Mountain, GA. 30087
Phone: 770 491 9250
Email: mikes@betadesigngroup.com

Client:
SUNBELT BUILDERS™
10841 HWY 9 COVINGTON GA 30014 770 788 0101

Project:
R. L. COUSINS COMMUNITY CENTER
NEWTON CO. BOC RFP #24-04
8134 GEIGER STREET, N.W.
COVINGTON, GEORGIA

Issue Date:	Initial	Drwg. Revision Description:

Project No.: 2023012
Drwg. Date: 06/28/24
Drwg. Revision:
Drawn By: B.D.G.
Checked By: E.M.S.
File Name: 2023012 A-1.2

Sheet Title:
OVERALL RENOV. KEY PLAN

Sheet No.:
A-1.2

© BETA DESIGN GROUP, INC. 2024. This drawing may be utilized only for the purpose of constructing or installing the work shown thereon at the site of the work specified. Any other use of this drawing, including without limitation any reproduction or alteration of this drawing, without the prior written approval of Beta Design Group, Inc. is prohibited.

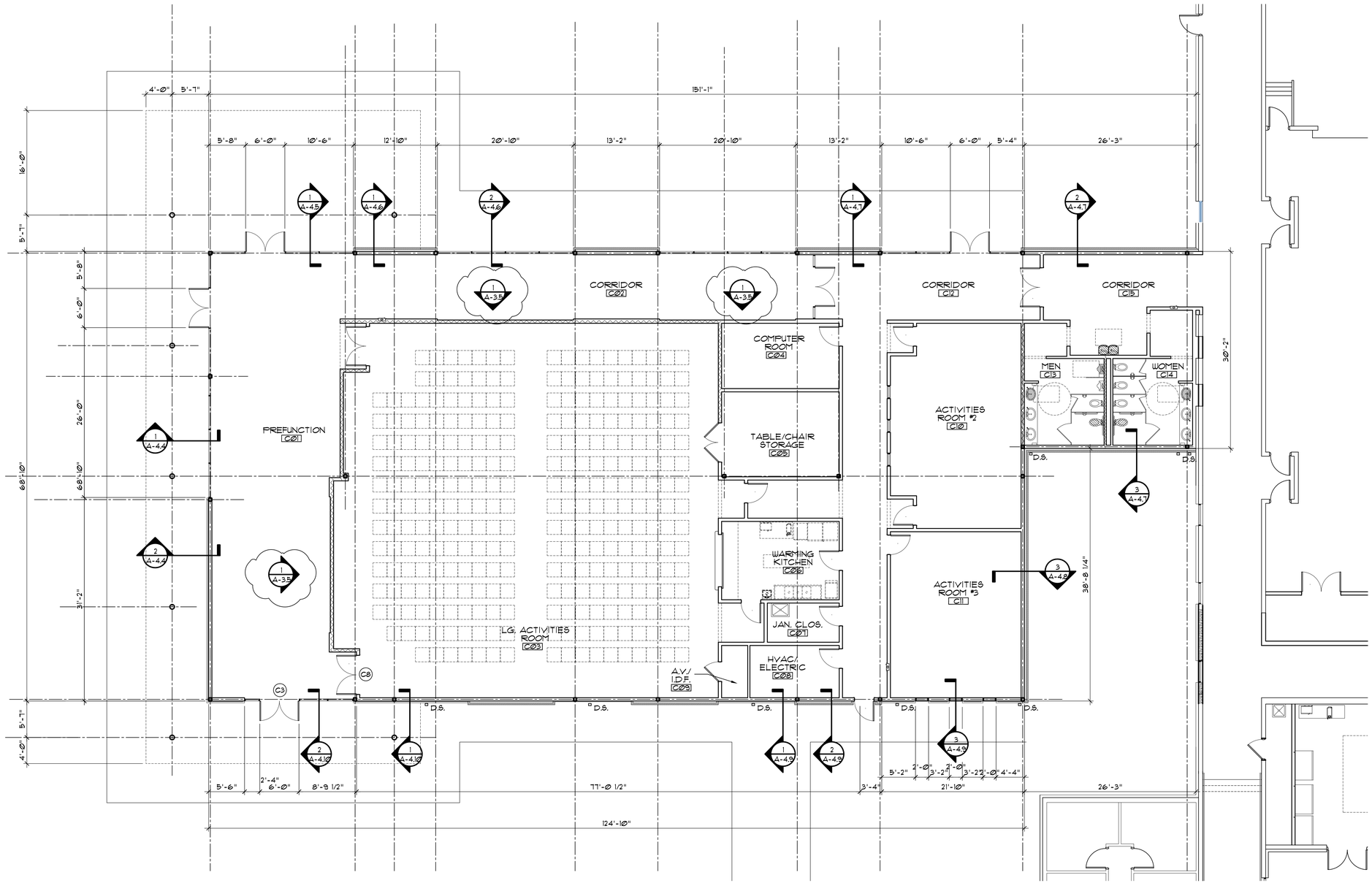

ENLARGED FLOOR PLAN

1/8" = 1'-0"

SEE SHEET A-1.2.5 FOR INTERIOR CONSTRUCTION DETAILS

NORTH

ALPHA BLDG SET 08-27-2024

phase two, for construction

STATE OF GEORGIA — E. MICHAEL SCHULTZ — CERTIFICATE NO. 025267 — REGISTERED ARCHITECT

Beta Design Group, Inc.
Architecture
2118 Rosser Place Stone Mountain, GA. 30087
Phone: 770 491 9250
Email: mikes@betadesigngroup.com

Client:
SUNBELT BUILDERS™
10841 HWY 9 CONYERS GA 30014 770 388 0101

Project:
R. L. COUSINS COMMUNITY CENTER
NEWTON CO. BOC RFP #24-04
8134 GEIGER STREET, N.W.
COVINGTON, GEORGIA

Issue Date:	Initial:	Drwg. Revision Description:
07/11/24	E.M.S.	1. DRWG. COORD. W/ CONTR.

Project No.: 2023012
Drwg. Date: 06/28/24
Drwg. Revision: 07/11/24
Drawn By: B.D.G.
Checked By: E.M.S.
File Name: 2023012A-1.2.4

Sheet Title: ENLARGED FLOOR PLAN

Sheet No.: A-1.2.4

© BETA DESIGN GROUP, INC. 2024 This drawing may be utilized only for the purpose of constructing or installing the work shown thereon at the site of the work specified. Any other use of this drawing, including without limitation any reproduction or alteration of this drawing, without the prior written approval of Beta Design Group, Inc. is prohibited.

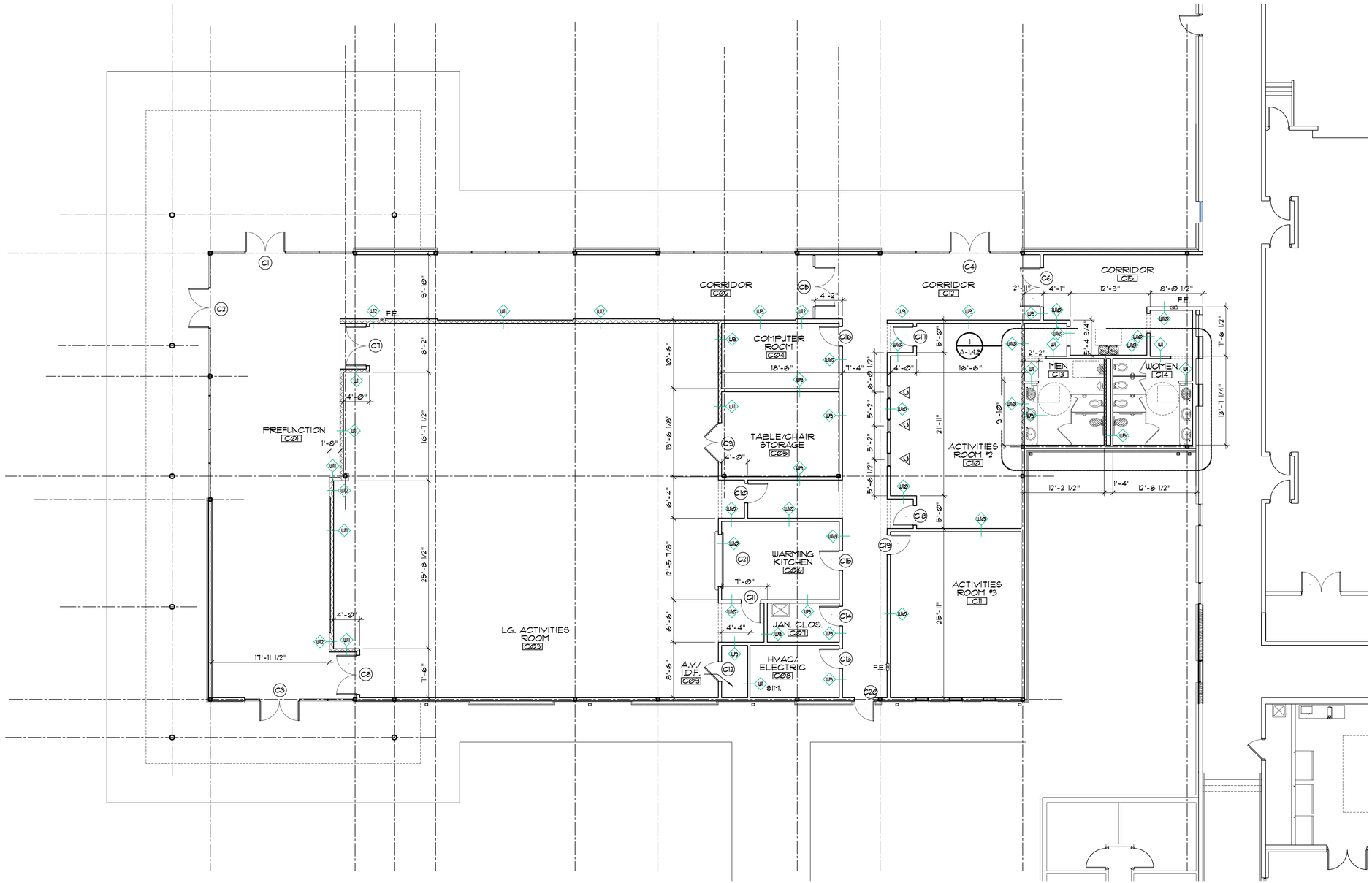

ALPHA BLDG SET 08-27-2024

1 INTERIOR FLOOR PLAN

1/8" = 1'-0"

NORTH

phase two, for construction

STATE OF GEORGIA
E. MICHAEL SCHULTZ
CERTIFICATE NO. 21-4
REGISTERED ARCHITECT

Beta Design Group, Inc.
Architecture
2118 Rosser Place Stone Mountain, GA. 30087
Phone: 770 491 9250
Email: mikes@betadesigngroup.com

Client:
SUNBELT BUILDERS™
10841 HWY 8 COVINGTON GA 30014 / 770 786 0 1 770 786 046

Project:
R. L. COUSINS COMMUNITY CENTER
NEWTON CO. BOC RFP #24-04
8134 GEIGER STREET, N.W.
COVINGTON, GEORGIA

Issue Date:	Initial:	Drwg. Revision Description:

Project No.: 2023012
Drwg. Date: 06/28/24
Drwg. Revision:
Drawn By: B.D.G.
Checked By: E.M.S.
File Name: 2023012A-1.2.5

Sheet Title:
INTERIOR FLOOR PLAN

Sheet No.:
A-1.2.5

© BETA DESIGN GROUP, INC. 2024 This drawing may be utilized only for the purpose of constructing or installing the work shown thereon at the site of the work specified. Any other use of this drawing, including without limitation any reproduction or alteration of this drawing, without the prior written approval of Beta Design Group, Inc. is prohibited.

CEILING LEGEND

MATERIALS

1	2'X2' ACOUSTICAL CEILING TILE, SEE SPECS.
2	2'X2' VINYL CLAD CEILING PANELS
3	EXPOSED (EXISTING) CEILING
4	EXPOSED STRUCTURE, NO CEILING
5	GYPSUM BOARD SOFFIT
6	GYPSUM BOARD CLOUD STRUCTURE, COMPASSO EDGE
7	GYPSUM BOARD, PAINTED

SYMBOLS

- 2X4 FLUORESCENT LIGHT FIXTURE
- 2X2 FLUORESCENT LIGHT FIXTURE
- 8' FLUORESCENT STRIP LIGHT
- 1X8 FLUORESCENT LIGHT
- RECESSED INCANDESCENT LIGHT
- SURFACE MOUNTED LIGHT FIXTURE
- WALL MOUNTED LIGHT FIXTURE
- (1) CEILING MATERIAL

CEILING NOTES

1. SEE ELECTRICAL DRAWINGS FOR LIGHTING INFORMATION.
2. SEE MECHANICAL DRAWINGS FOR HVAC INFORMATION.
3. SEE SPRINKLER DRAWINGS FOR SPRINKLER INFORMATION.
4. SEE FINISH SCHEDULE FOR CEILING HEIGHTS.
5. CEILING HEIGHTS, IF PROVIDED, ARE TO THE CEILING MATERIAL FINISH, AFF.

F:\ACAD library\ACAD Legends Notes and Schedules*Master Legends.dwg

COMMUNITY CENTER REFLECTED CEILING PLAN

1/8" = 1'-0"

ALPHA BLDG SET 08-27-2024

phase one, for construction

© BETA DESIGN GROUP, INC. 2024 This drawing may be utilized only for the purpose of constructing or installing the work shown thereon at the site of the work specified. Any other use of this drawing, including without limitation any reproduction or alteration of this drawing, without the prior written approval of Beta Design Group, Inc. is prohibited.

STATE OF GEORGIA — E. MICHAEL SHULER — LICENSE NUMBER — CERTIFICATE NO. — REGISTERED ARCHITECT

Beta Design Group, Inc.
Architecture
2118 Rosser Place Stone Mountain, GA. 30087
Phone: 770.491.9250
Email: mikes@betadesigngroup.com

Client:
sunbelt BUILDERS™
10841 HWY 8 COVINGTON GA 30014 770.788.0101 770.788.046

Project:
R. L. COUSINS COMMUNITY
NEWTON CO. BOC RFP #24-04
8134 GEIGER STREET, N.W.
COVINGTON, GEORGIA

Issue Date:	Initial	Drwg. Revision Description:

Project No.: 2023012
Drwg. Date: 06/28/24
Drwg. Revision:
Drawn By: B.D.G.
Checked By: E.M.S.
File Name: 2023012 A-1.3.4

Sheet Title: *REFL. CLNG. PLAN*

Sheet No.: A-1.3.4

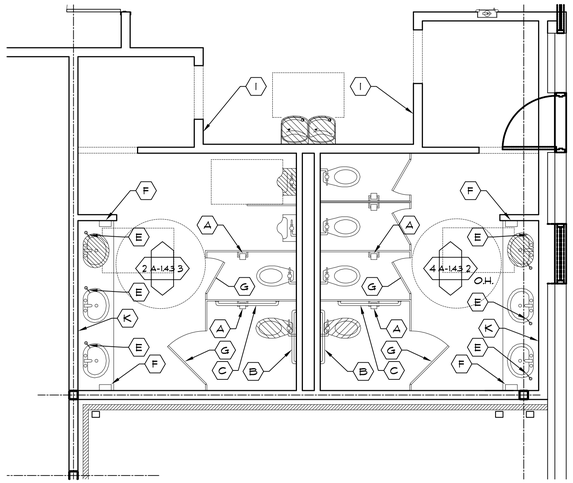

1 ENLARGED TOILET PLAN

1/8" = 1'-0"

TOILET ACCESSORIES

MARK	DESCRIPTION	MODEL NO.
A	TOILET PAPER HOLDER, DBL.	ASI *0030
B	36" GRAB BAR, 1 1/2" DIA.	ASI 3700 SERIES
C	42" GRAB BAR, 1 1/2" DIA.	ASI 3700 SERIES
D	MIRROR, S.S. CHANNEL FRAME, 18 X 36	ASI 0620-1830
E	SOAP DISPENSER, COUNTER MOUNT	ASI *0332-D
F	PAPER TOWEL DISPENSER	ASI *0210
G	COAT HOOK	ASI *0714
H	HANDICAP SIGN, UNISEX	
I	HANDICAP SIGN, PER GENDER	
J	SOAP DISPENSER, WALL MOUNT	ASI *0347
K	MIRROR, FULL LENGTH OF VANITY	-

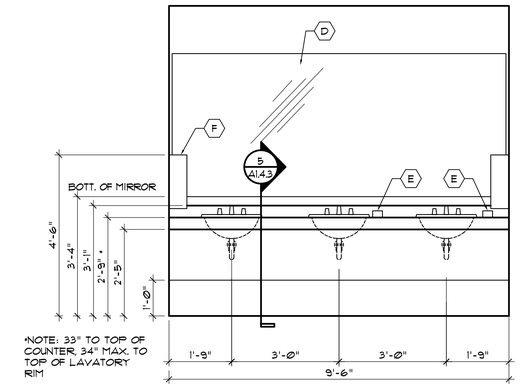

*NOTE: 33" TO TOP OF COUNTER, 34" MAX. TO TOP OF LAVATORY RIM

NOTE:
USE HI-MAC COUNTER MATERIAL, FIELD MEASURE BEFORE CONSTRUCTING COUNTERTOP

2 TOILET ELEVATION

1/2" = 1'-0" 10810aac

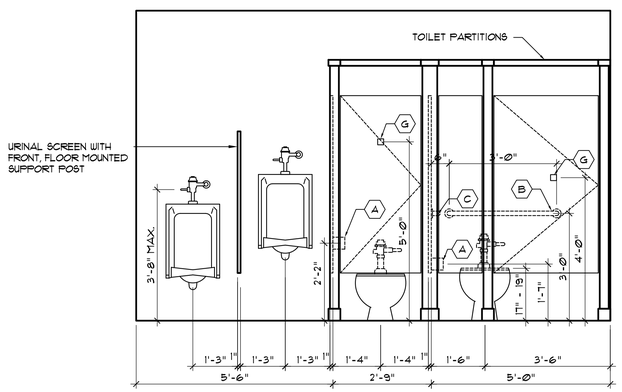

3 TOILET ELEVATION

1/2" = 1'-0" 10810aac

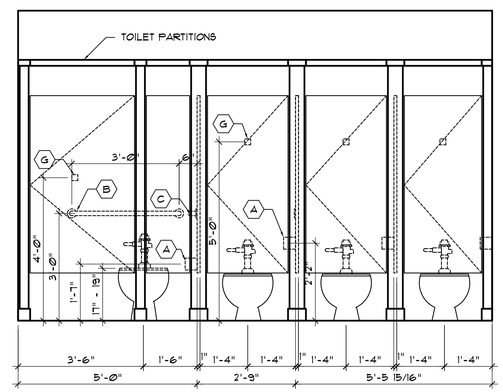

4 TOILET ELEVATION

1/2" = 1'-0" 10810aac

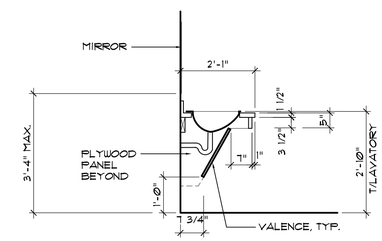

5 SECTION

1/2" = 1'-0" 10810aay

USE HI-MAC COUNTER, CABINET VENDOR TO COORDINATE LAVATORY DIMENSION PRIOR TO MOUNTING CABINETRY

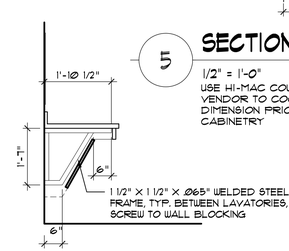

1 1/2" X 1 1/2" X Ø.65" WELDED STEEL FRAME, TYP. BETWEEN LAVATORIES, SCREW TO WALL BLOCKING

5a SECTION

1/2" = 1'-0"

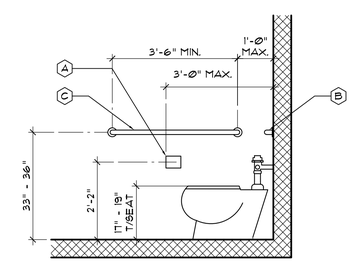

6 H.C. WATER CLOSET

1/2" = 1'-0" 10810aay

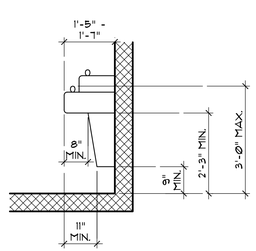

7 E.W.C. CLEARANCES

1/2" = 1'-0" 15412aaa

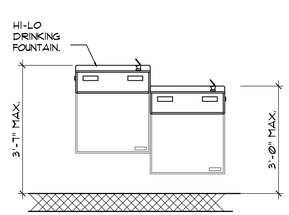

8 E.W.C. ELEVATION

1/2"= 1'-0" 15412aaa

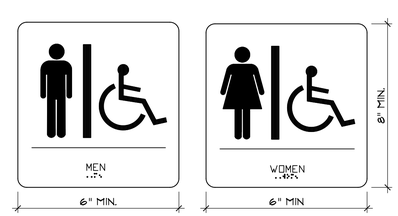

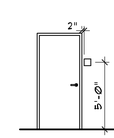

NOTES:
LETTERS & GRAPHICS RAISED 1/32"
GRADE 2 BRAILLE
LETTERS 5/8" TO 2" HIGH
FINISH: EGGSHELL, MATTE, NON-GLARE W/ CONTRASTING CHARACTERS

TYPICAL HANDICAP SIGN RELATIONSHIP W/ DOOR

9 A.D.A. ACCESSIBLE TOILET SIGN DETAIL

1 1/2" = 1'-0" 10440haa

ALPHA BLDG SET 08-27-2024

phase two, for construction

STATE OF GEORGIA — E. Michael Shultz — REGISTERED ARCHITECT — CERTIFICATE NO. 019767

Beta Design Group, Inc.
Architecture
2118 Rosser Place Stone Mountain, GA. 30087
Phone: 770 491 9250
Email: mikes@betadesigngroup.com

Client:
sunbelt BUILDERS™
10841 HWY 9 CUMMING GA 30014 770 888 0101 770 888 046

Project:
R. L. COUSINS COMMUNITY CENTER
NEWTON CO. BOC RFP #24-04
8134 GEIGER STREET, N.W.
COVINGTON, GEORGIA

Issue Date:	Initial	Drwg. Revision Description:

Project No.: 2023012
Drwg. Date: 06/28/24
Drwg. Revision:
Drawn By: B.D.G.
Checked By: E.M.S.
File Name: 2023012A-1.4.3

Sheet Title: ENLARGED TOILET PLANS

Sheet No.: A-1.4.3

© BETA DESIGN GROUP, INC. 2024. This drawing may be utilized only for the purpose of constructing or installing the work shown thereon at the site of the work specified. Any other use of this drawing, including without limitation any reproduction or alteration of this drawing, without the prior written approval of Beta Design Group, Inc. is prohibited.

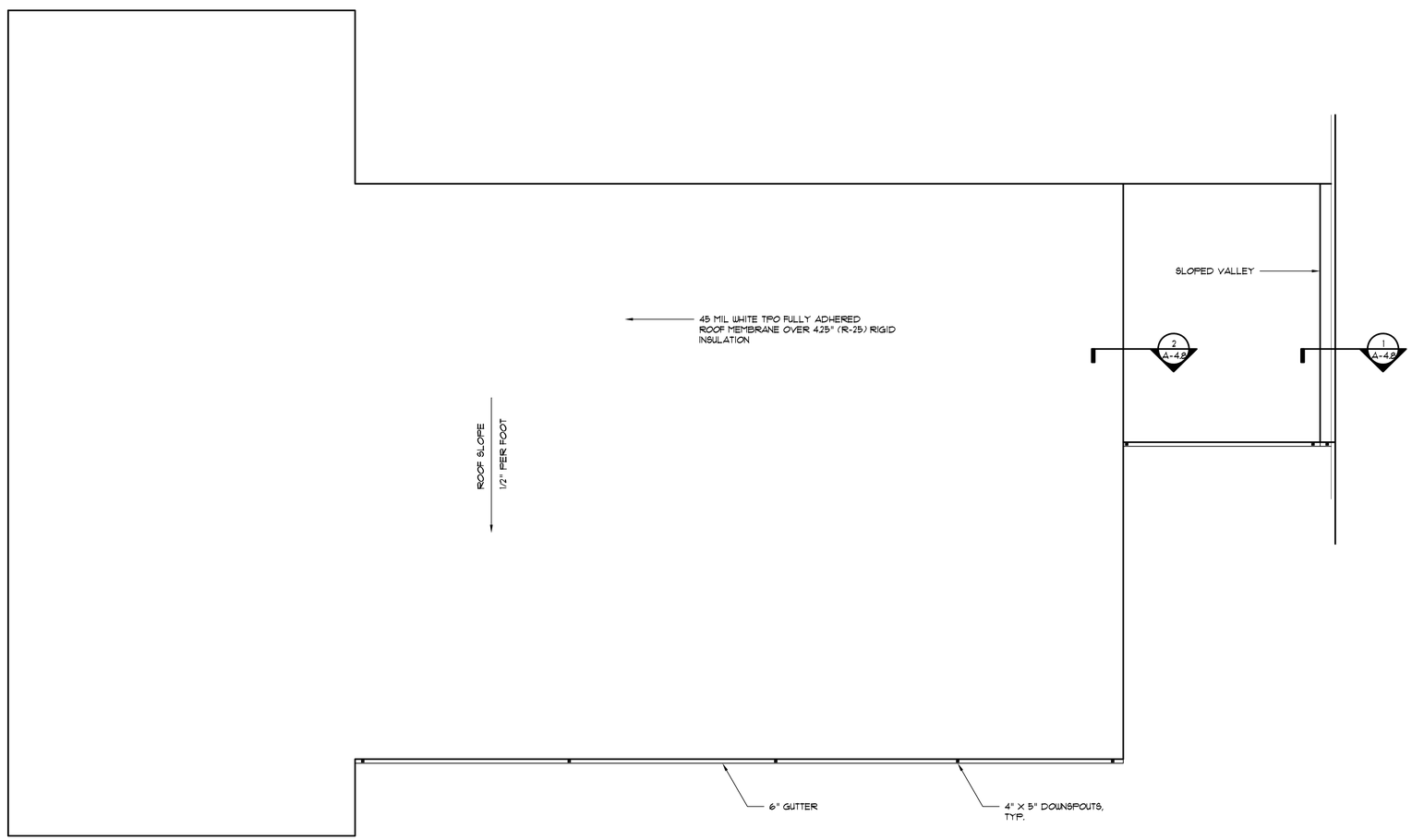

ALPHA BLDG SET 08-27-2024

1 ROOF PLAN
1/8" = 1'-0"

NORTH

phase two, for construction

© BETA DESIGN GROUP, INC. 2024 This drawing may be utilized only for the purpose of constructing or installing the work shown thereon at the site of the work specified. Any other use of this drawing, including without limitation any reproduction or alteration of this drawing, without the prior written approval of Beta Design Group, Inc. is prohibited.

STATE OF GEORGIA
E. MICHAEL SCHULTZ
LICENSED ARCHITECT
CERTIFICATE NO. 025-025
REGISTERED ARCHITECT

Beta Design Group, Inc.
Architecture
2118 Rosser Place Stone Mountain, GA. 30087
Phone: 770 491 9250
Email: mikes@betadesigngroup.com

Client:
SUNBELT BUILDERS™
10841 HWY 9 CUMMING GA 30014 770 888 0 1 770 888 046

Project:
R. L. COUSINS COMMUNITY CENTER
NEWTON CO. BOC RFP #24-04
8134 GEIGER STREET, N.W.
COVINGTON, GEORGIA

Issue Date:	Initial:	Drwg. Revision Description:

Project No.: 2023012
Drwg. Date: 06/28/24
Drwg. Revision:
Drawn By: B.D.G.
Checked By: E.M.S.
File Name: 2023012A-1.5

Sheet Title:
ROOF PLAN

Sheet No.:
A-1.5

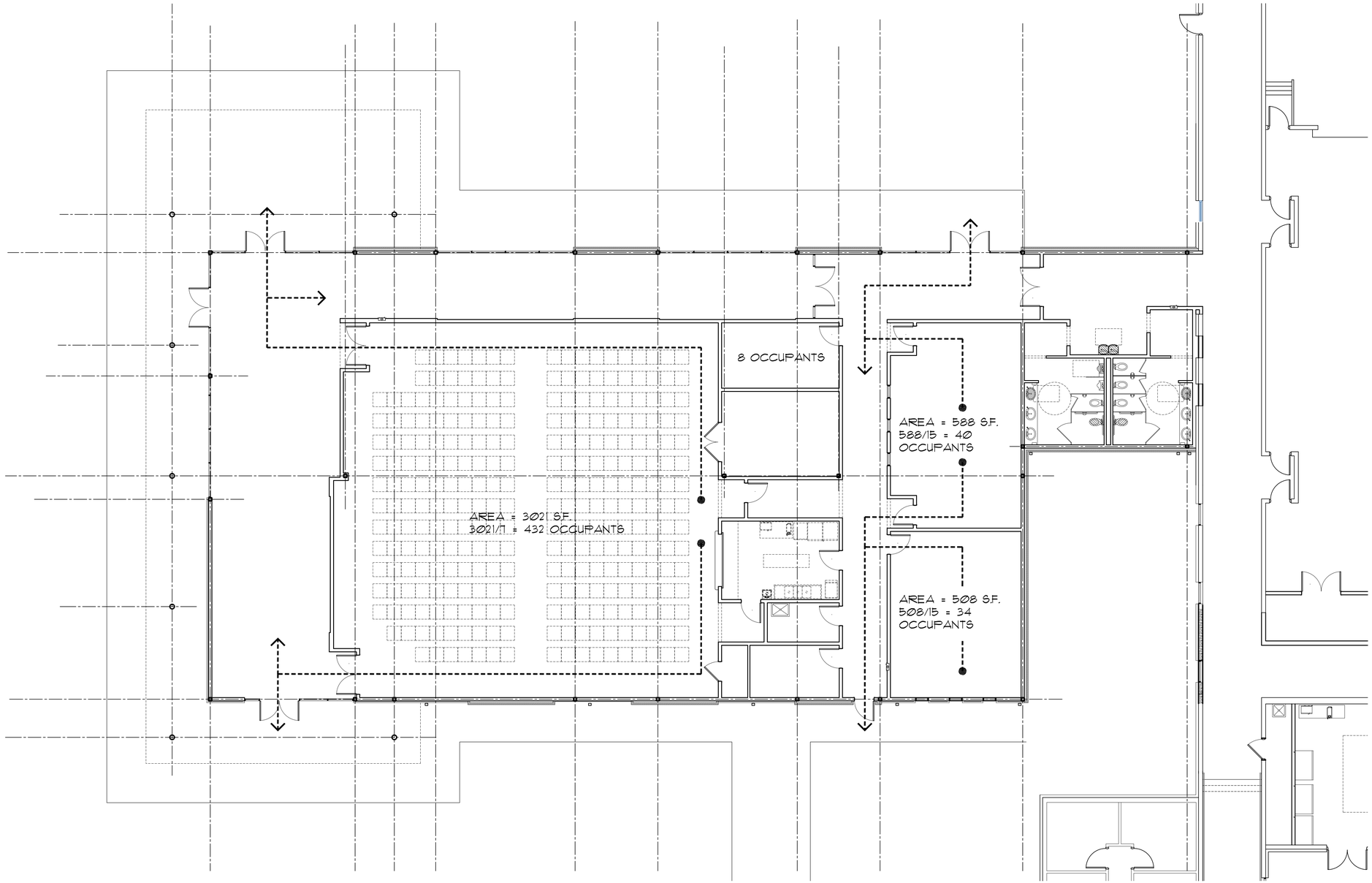

1 LIFE SAFETY PLAN
1/8" = 1'-0"

NORTH

ALPHA BLDG SET 08-27-2024

phase two, for construction

© BETA DESIGN GROUP, INC. 2024. This drawing may be utilized only for the purpose of constructing or installing the work shown thereon at the site of the work specified. Any other use of this drawing, including without limitation any reproduction or alteration of this drawing, without the prior written approval of Beta Design Group, Inc. is prohibited.

STATE OF GEORGIA
E. MICHAEL SHUMLEY
CERTIFICATE NO. 21-4
REGISTERED ARCHITECT

Beta Design Group, Inc.
Architecture
2118 Rosser Place Stone Mountain, GA. 30087
Phone: 770 491 9250
Email: mikes@betadesigngroup.com

Client:
SUNBELT BUILDERS™
10841 HWY 9 CONYERS GA 30014 770 388 0 1 770 388 046

Project:
R. L. COUSINS COMMUNITY CENTER
NEWTON CO. BOC RFP #24-04
8134 GEIGER STREET, N.W.
COVINGTON, GEORGIA

Issue Date:	Initial:	Drwg. Revision Description:
08/12/24	E.M.S.	1. NEW SHEET ADDED

Project No.: 2023012
Drwg. Date: 08/12/24
Drwg. Revision:
Drawn By: B.D.G.
Checked By: E.M.S.
File Name: 2023012A-1.5.2

Sheet Title:
LIFE SAFETY PLAN

Sheet No.:
A-1.5.2

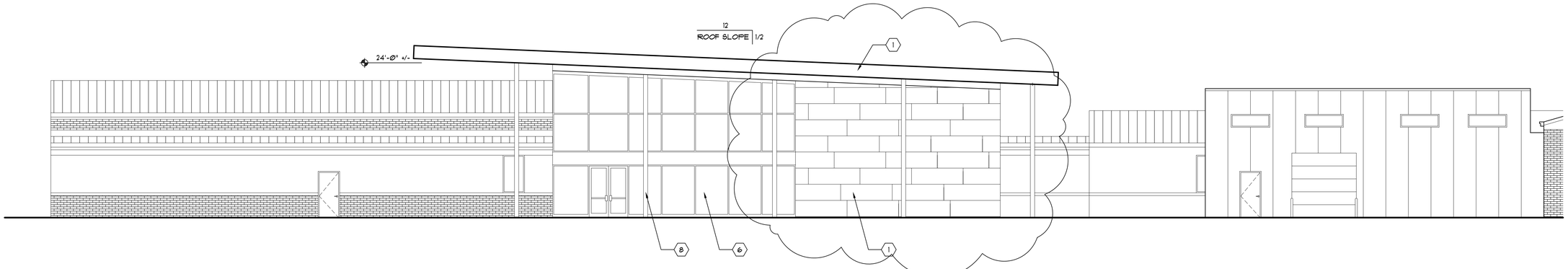

1 FRONT (WEST) ELEVATION
1/8" = 1'-0"

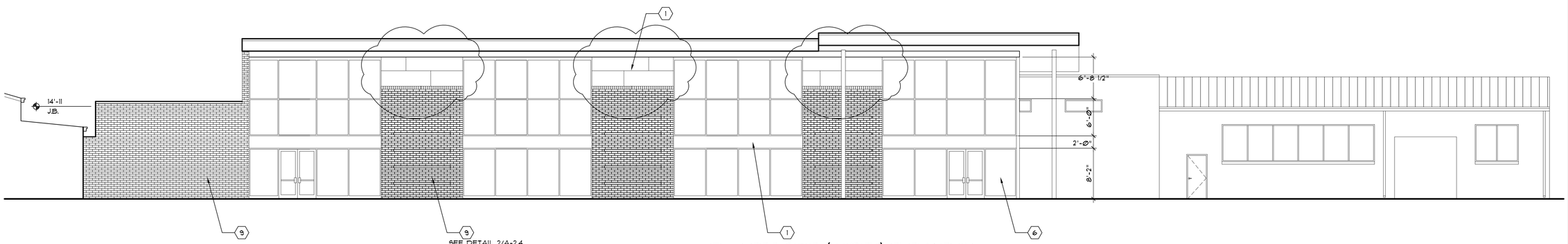

2 LEFT SIDE (NORTH) ELEVATION
1/8" = 1'-0"

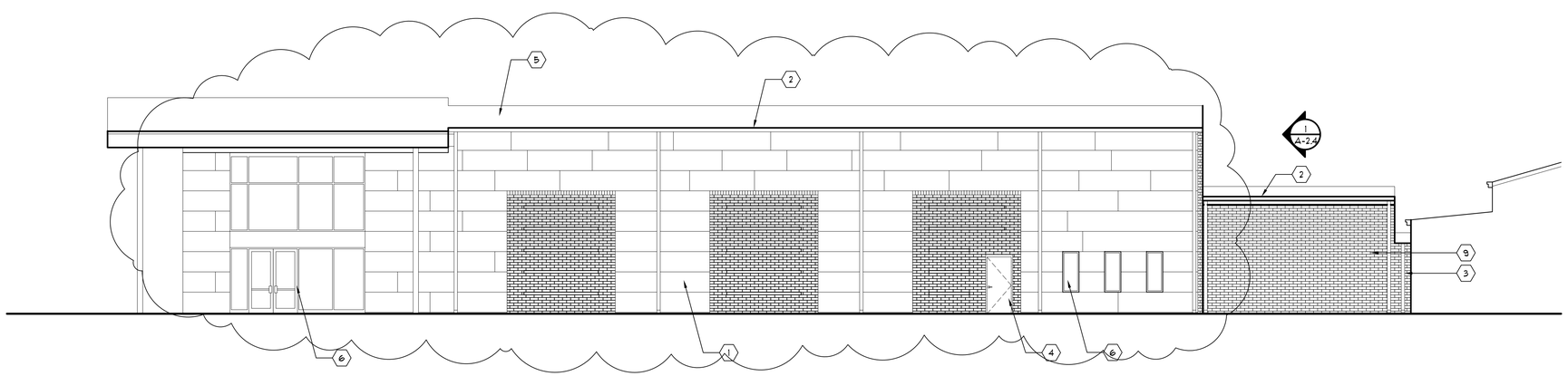

3 RIGHT SIDE (SOUTH) ELEVATION
1/8" = 1'-0"

ELEVATION MATERIAL LEGEND

#	DESCRIPTION
1	ACM WALL PANELS, 30" WIDE, 3 COLORS, TO BE DETERMINED
2	24 GA. 6" PREFINISHED METAL GUTTER, COMPLIMENT WALL COLOR
3	24 GA. 4" X 5" PAINTED METAL DOWNSPOUT, COMPLIMENT WALL COLOR
4	PAINTED H.M. DOOR & FRAME W/ 4" CONCRETE PAD
5	SLOPED TPO ROOF
6	INSULATED GLASS IN ALUM. FRAMES, SEE SPECS.
7	26 GA. PREFINISHED METAL COPING, COOR. W/ PANEL COLOR
8	PAINTED STEEL COLUMN
9	BRICK VENEER

ALPHA BLDG SET 08-27-2024

phase two, for construction

© BETA DESIGN GROUP, INC. 2024 This drawing may be utilized only for the purpose of constructing or installing the work shown thereon at the site of the work specified. Any other use of this drawing, including without limitation any reproduction or alteration of this drawing, without the prior written approval of Beta Design Group, Inc. is prohibited.

STATE OF GEORGIA
E. MICHAEL SHADLEY
CERTIFICATE NO. 21147
REGISTERED ARCHITECT

Beta Design Group, Inc.
Architecture
2118 Rosser Place Stone Mountain, GA. 30087
Phone: 770.491.9250
Email: mikes@betadesigngroup.com

Client:
SUNBELT BUILDERS™
10841 HWY 9 CUMMING GA. 0014 770.888.0101

Project:
R. L. COUSINS COMMUNITY CENTER
NEWTON CO. BOC RFP #24-04
8134 GEIGER STREET, N.W.
COVINGTON, GEORGIA

Issue Date:	Initial:	Drwg. Revision Description:
07/11/24	E.M.S.	1. DRWG. COORD. W/ CONTR.

Project No.: 2023012
Drwg. Date: 06/28/24
Drwg. Revision: 07/11/24
Drawn By: B.D.G.
Checked By: E.M.S.
File Name: 2023012 A-2.2

Sheet Title:
BUILDING ELEVATIONS

Sheet No.:
A-2.2

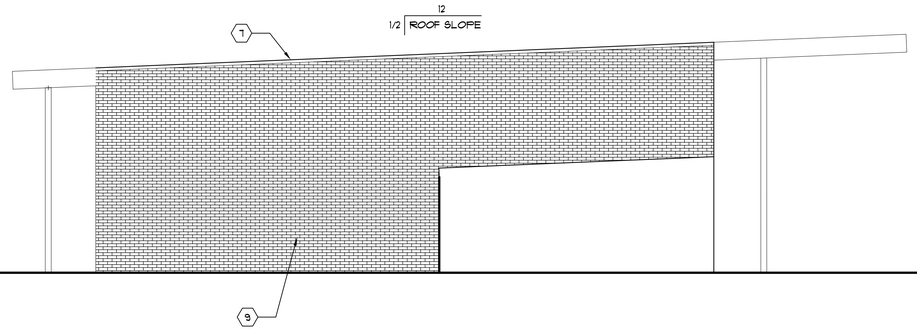

1 REAR (EAST) ELEVATION

1/8" = 1'-0"

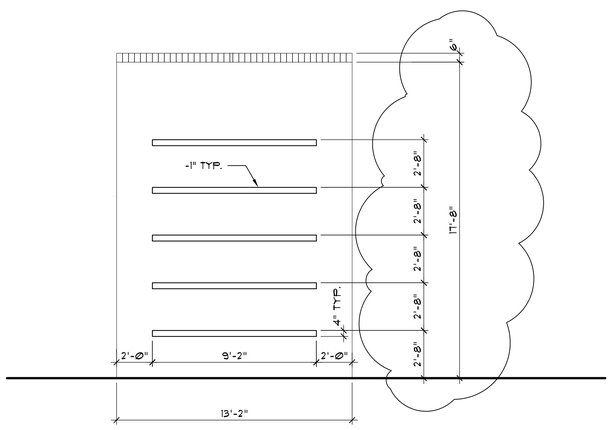

2 BRICK DETAIL

1/4" = 1'-0"

ELEVATION MATERIAL LEGEND

#	DESCRIPTION
1	ACM WALL PANELS, 24" WIDE, 3 COLORS, TO BE DETERMINED
2	24 GA. 6" PREFINISHED METAL GUTTER, COMPLIMENT WALL COLOR
3	24 GA. 4" X 5" PAINTED METAL DOWNSPOUT, COMPLIMENT WALL COLOR
4	PAINTED H.M. DOOR & FRAME W/ 4" CONCRETE PAD
5	SLOPED TPO ROOF
6	INSULATED GLASS IN ALUM. FRAMES, SEE SPECS.
7	26 GA. PREFINISHED METAL COPING, COOR. W/ PANEL COLOR
8	PAINTED STEEL COLUMN
9	BRICK VENEER

ALPHA BLDG SET 08-27-2024

phase two, for construction

© BETA DESIGN GROUP, INC. 2024. This drawing may be utilized only for the purpose of constructing or installing the work shown thereon at the site of the work specified. Any other use of this drawing, including without limitation any reproduction or alteration of this drawing, without the prior written approval of Beta Design Group, Inc. is prohibited.

Client:
SUNBELT BUILDERS™
1084 HWY 8 GD/MIDDLE GA 0014 770 788 046

Project:
R. L. COUSINS COMMUNITY CENTER
NEWTON CO. BOC RFP #24-04
8134 GEIGER STREET, N.W.
COVINGTON, GEORGIA

Issue Date:	Initial	Drwg. Revision Description:
07/11/24	E.M.S.	1. DRWG. COORD. W/ CONTR.

Project No.: 2023012
Drwg. Date: 06/28/24
Drwg. Revision: 07/11/24
Drawn By: B.D.G.
Checked By: E.M.S.
File Name: 2023012 A-2.4

Sheet Title:
BUILDING ELEVATIONS

Sheet No.:
A-2.4

STATE OF GEORGIA
E. MICHAEL SHADLEY
STATE CERTIFICATE NO. 0000
REGISTERED ARCHITECT

Beta Design Group, Inc.
Architecture
2118 Rosser Place Stone Mountain, GA. 30087
Phone: 770 491 9250
Email: mikes@betadesigngroup.com

INTERIOR FINISH SCHEDULE

MARK	ROOM NAME	WALLS		CEILING			BASE		FLOOR	REMARKS *
		MATERIAL	FINISH	MATERIAL	FINISH	HEIGHT	MATERIAL	FINISH		
	COMMUNITY CENTER									
C01	PREFUNCTION	GLASS/GYPSUM BOARD	PT.	CLOUDS/EXPOSED	PT.	VARIES.	4" RUBBER	F.F.	POLISHED CONCRETE	1
C02	CORRIDOR	EXISTING GYPSUM BOARD	PT.	CLOUDS/EXPOSED.	PT.	VARIES.	4" RUBBER	F.F.	POLISHED CONCRETE	1
C03	LARGE ACTIVITIES ROOM	GYPSUM BOARD	PT.	CLOUDS/EXPOSED	PT.	VARIES.	4" RUBBER	F.F.	L.V.T.	1
C04	COMPUTER ROOM	GYPSUM BOARD	PT.	ACOUSTICAL	F.F.	9'-0"	4" RUBBER	F.F.	L.V.T.	
C05	TABLES & CHAIR STORAGE	GYPSUM BOARD	PT.	EXP. STRUCTURE	-	VARIES	4" RUBBER	F.F.	CONCRETE	
C06	WARMING KITCHEN	GYPSUM BOARD/F.R.P.	F.F.	ACOUSTICAL	F.F.	10'-0"	Q.T.	F.F.	Q.T.	
C07	JANITOR CLOSET	GYPSUM BOARD	UNPTD.	EXP. STRUCTURE	-	VARIES	-	-	CONCRETE	
C08	HVAC/ELECTRIC ROOM	GYPSUM BOARD	UNPTD.	EXP. STRUCTURE	-	VARIES	-	-	CONCRETE	
C09	A.V./I.D.F.	GYPSUM BOARD	UNPTD.	EXP. STRUCTURE	-	VARIES	-	-	CONCRETE	
C10	ACTIVITIES ROOM #2	GYPSUM BOARD	PT.	ACOUSTICAL	F.F.	12'-0"	4" RUBBER	F.F.	L.V.T.	
C11	ACTIVITIES ROOM #3	GYPSUM BOARD	PT.	ACOUSTICAL	F.F.	12'-0"	4" RUBBER	F.F.	L.V.T.	
C12	CORRIDOR	GLASS/GYPSUM BOARD	PT.	ACOUSTICAL/EXPOSED	F.F.	10'-0"/VARIES	4" RUBBER	F.F.	L.V.T.	1
C13	MEN'S TOILET	GYPSUM BOARD/C.T. FULL HT.	C.T.	ACOUSTICAL	F.F.	9'-0"	C.T. COVE BASE	F.F.	C.T.	2
C14	WOMEN'S TOILET	GYPSUM BOARD/C.T. FULL HT.	C.T.	ACOUSTICAL	F.F.	9'-0"	C.T. COVE BASE	F.F.	C.T.	2
C15	CORRIDOR	GYPSUM BOARD	PT.	ACOUSTICAL	F.F.	10'-0"	4" RUBBER	F.F.	L.V.T.	

F:\ACAD library\ACAD Legends Notes and Schedules\Master Legends.dwg

ABBREVIATIONS

CONC. = CONCRETE
E.S. = EXPOSED STRUCTURE
PT. = PAINT
F.F. = FACTORY FINISH
P.F. = PRE-FINISHED
L.V.T. = LUXURY VINYL TILE
C.T. = CERAMIC TILE
F.R.P. = FIBERGLASS REINFORCED PLASTIC
V.C.T. = VINYL COMPOSITION TILE
Q.T. = QUARRY TILE

GENERAL FINISH NOTES:

A ADVISE CONSULTANT OF ANY CONFLICT W/ FINISHES PRIOR TO INSTALLATION.
B ALL FINISH MATERIALS ARE FURNISHED AND INSTALLED BY CONTRACTOR, UNLESS NOTED OTHERWISE.
C ALL EXPOSED DUCTWORK, PIPING AND CONDUIT TO REMAIN UNPAINTED.
D COORDINATE & CONFIRM COMPATIBILITY OF ALL FINISHES, (INTERIOR & EXTERIOR) MATERIALS, SEALANTS, SEALERS, PAINTS, CAULK, ADHESIVES, ETC... WITH SUBSTRATES, ADJACENT MATERIALS, ETC...
E ALL FINISHES IN EXIT PASSAGEWAYS SHALL BE CLASS A OR B. ALL OTHERS SHALL BE CLASS C MINIMUM.

* REMARKS:

1. PAINT (DRY FOG) EXPOSED CEILINGS, BLACK
2. 12" X 24" TILE, WALLS AND FLOOR, USE SCHLUTER COVE TRIM AT OUTSIDE CORNERS

PAINTING NOTES:

A HOLLOW METAL DOORS & FRAMES RECEIVE (2) COATS OF ENAMEL.
B OVERHEAD DOOR GUARD POST RECEIVE (2) COATS OF ENAMEL.
C ALL EXPOSED STEEL SHALL RECEIVE (1) SHOP COAT OF RUST PREVENTATIVE PRIMER. TOUCH UP STEEL WITH MATCHING PRIMER AFTER STEEL ERECTION IS COMPLETE.

INTERIOR WINDOW SCHEDULE

MARK	SIZE (W X H)	FRAME		GLASS		SILL HT. A.F.F.	HEAD HT. A.F.F.	REMARKS
		MATERIAL	FINISH	THICKNESS	FINISH			
C	2'-0" X 5'-0"	ALUM.	P. F.	1/4"	CLEAR	2'-0"	7'-0"	SEE 1, 2, 3/A-3.1.1

F:\ACAD library\ACAD Legends Notes and Schedules\Master Legends.dwg

REMARKS:

GENERAL WINDOW NOTES:

1. ADVISE CONSULTANT OF ANY CONFLICTS PRIOR TO INSTALLATION.
2. ALL MATERIALS ARE FURNISHED AND INSTALLED BY CONTRACTOR, UNLESS NOTED OTHERWISE.
3. PROVIDE TEMPERED GLASS @ STOREFRONT DOORS & @ WINDOWS WITHIN 2'-0" OF A DOOR.
4. SEE REMAINDER OF DRAWINGS FOR DETAILS RELATED TO EXTERIOR STOREFRONT AND/OR WINDOWS.

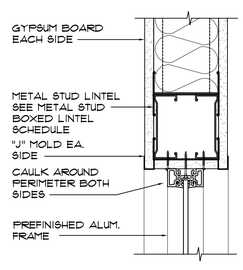

1 ALUM. WINDOW HEAD
3" = 1'-0"
08520aac

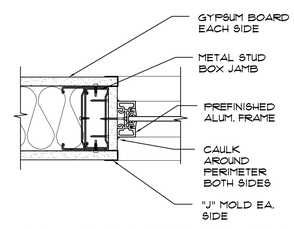

2 ALUM. WINDOW JAMB
3" = 1'-0"
08520aac

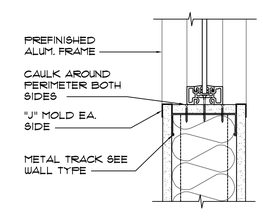

3 ALUM. WINDOW SILL
3" = 1'-0"
08520aac

ALPHA BLDG SET 08-27-2024

phase two, for construction

© BETA DESIGN GROUP, INC. 2024 This drawing may be utilized only for the purpose of constructing or installing the work shown thereon at the site of the work specified. Any other use of this drawing, including without limitation any reproduction or alteration of this drawing, without the prior written approval of Beta Design Group, Inc. is prohibited.

STATE OF GEORGIA
E. MICHAEL SHULLER
CERTIFICATE NO. 019767
REGISTERED ARCHITECT

Beta Design Group, Inc.
Architecture
2118 Rosser Place Stone Mountain, GA. 30087
Phone: 770.491.9250
Email: mikes@betadesigngroup.com

Client:
SUNBELT BUILDERS™
10841 HWY 8 OCOEE/WITON LA. OCOEE 34 / 770 / 88 0 1 770 / 88 046

Project:
R. L. COUSINS COMMUNITY CENTER
NEWTON CO. BOC RFP #24-04
8134 GEIGER STREET, N.W.
COVINGTON, GEORGIA

Issue Date:	Initial:	Drwg. Revision Description:

Project No.: 2023012
Drwg. Date: 06/28/24
Drwg. Revision:
Drawn By: B.D.G.
Checked By: E.M.S.
File Name: 2023012 A-3.1.1

Sheet Title:
ROOM FINISH SCHEDULE

Sheet No.:
A-3.1.1

DOOR SCHEDULE

MARK	SIZE (W X H X T)	TYPE	DESCRIPTION	FINISH	FRAME WIDTH	FRAME MAT.	FRAME FINISH	DETAIL	CLOSER?	LABEL	REMARKS	MARK
C1	PR. 3'-0" X 8'-0" X 1 3/4"	C	ALUMINUM STOREFRONT DOORS	P.F.	4"	AL.	P.F.	-	Y, 2	-	3, 5, 6, 7, 13, 16, 17, 21, 22	C1
C2	PR. 3'-0" X 8'-0" X 1 3/4"	C	ALUMINUM STOREFRONT DOORS	P.F.	4"	AL.	P.F.	-	Y, 2	-	3, 5, 6, 7, 13, 16, 17, 21, 22	C2
C3	PR. 3'-0" X 8'-0" X 1 3/4"	C	ALUMINUM STOREFRONT DOORS	P.F.	4"	AL.	P.F.	-	Y, 2	-	3, 5, 6, 7, 13, 16, 17, 21, 22, 25	C3
C4	PR. 3'-0" X 8'-0" X 1 3/4"	C	ALUMINUM STOREFRONT DOORS	P.F.	4"	AL.	P.F.	-	Y, 2	-	3, 5, 6, 7, 13, 16, 17, 21, 22	C4
C5	PR. 3'-0" X 8'-0" X 1 3/4"	C	ALUMINUM STOREFRONT DOORS	P.F.	4"	AL.	P.F.	-	Y, 2	-	4, 7, 12, 16, 17, 22	C5
C6	PR. 3'-0" X 8'-0" X 1 3/4"	E	HOLLOW METAL, FLUSH W/ VIEW PANEL	PT.	8"	H.M.	PT.	-	Y, 2	-	4, 12, 20, 22, 24	C6
C7	PR. 3'-0" X 8'-0" X 1 3/4"	E	HOLLOW METAL, FLUSH W/ VIEW PANEL	PT.	8"	H.M.	PT.	-	Y, 2	-	4, 12, 20, 22	C7
C8	PR. 3'-0" X 8'-0" X 1 3/4"	E	HOLLOW METAL, FLUSH W/ VIEW PANEL	PT.	8"	H.M.	PT.	-	Y, 2	-	4, 12, 20, 22	C8
C9	PR. 3'-0" X 7'-0" X 1 3/4"	A	BIRCH VENEER SCWD, FLUSH	ST.	8"	H.M.	PT.	-	-	-	24	C9
C10	3'-0" X 7'-0" X 1 3/4"	B	BIRCH VENEER SCWD, FLUSH W/ VIEW PANEL	ST.	8"	H.M.	PT.	-	Y	-	2, 4, 20	C10
C11	3'-0" X 7'-0" X 1 3/4"	B	BIRCH VENEER SCWD, FLUSH W/ VIEW PANEL	ST.	8"	H.M.	PT.	-	-	-	2, 4, 18, 20	C11
C12	3'-0" X 7'-0" X 1 3/4"	A	BIRCH VENEER SCWD, FLUSH	ST.	8"	H.M.	PT.	-	-	-	-	C12
C13	3'-0" X 7'-0" X 1 3/4"	A	BIRCH VENEER SCWD, FLUSH	ST.	8"	H.M.	PT.	-	-	-	18, 24	C13
C14	3'-0" X 7'-0" X 1 3/4"	A	BIRCH VENEER SCWD, FLUSH	ST.	8"	H.M.	PT.	-	-	-	18	C14
C15	3'-0" X 7'-0" X 1 3/4"	B	BIRCH VENEER SCWD, FLUSH W/ VIEW PANEL	ST.	8"	H.M.	PT.	-	-	-	2, 4, 20	C15
C16	3'-0" X 7'-0" X 1 3/4"	B	BIRCH VENEER SCWD, FLUSH W/ VIEW PANEL	ST.	8"	H.M.	PT.	-	-	-	2, 4, 18	C16
C17	3'-0" X 7'-0" X 1 3/4"	B	BIRCH VENEER SCWD, FLUSH W/ VIEW PANEL	ST.	8"	H.M.	PT.	-	-	-	2, 4, 18	C17
C18	3'-0" X 7'-0" X 1 3/4"	B	BIRCH VENEER SCWD, FLUSH W/ VIEW PANEL	ST.	8"	H.M.	PT.	-	-	-	2, 4, 18	C18
C19	3'-0" X 7'-0" X 1 3/4"	B	BIRCH VENEER SCWD, FLUSH W/ VIEW PANEL	ST.	8"	H.M.	PT.	-	-	-	2, 4, 18	C19
C20	3'-0" X 7'-0" X 1 3/4"	A	HOLLOW METAL, FLUSH	PT.	8 1/2"	H.M.	PT.	-	Y	-	1, 5, 6, 7, 13, 14, 21, 22	C20
C21	4'-0" X 4'-0"	F	OVERHEAD COILING DOOR	F.F..	-	-	-	-	-	-	8, 12	C21

F:\ACAD library\ACAD Legends Notes and Schedules\Master Legends.dwg

ABBREVIATIONS

H.M. = HOLLOW METAL (KNOCK-DOWN FRAME)
PT. = PAINT
ST. = (FIELD) STAIN
AL OR ALUM. = ALUMINUM
P.F. = PRE-FINISHED
SCWD = SOLID CORE WOOD

REMARKS:

1. BALL BEARING HINGES, NON-REMOVABLE PINS
2. (1) VIEW PANEL
3. TEMPERED GLASS W/ BRONZE TINT
4. TEMPERED CLEAR GLASS
5. THRESHOLD
6. WEATHERSTRIPPING
7. LATCH GUARD
8. MANUAL OPERATION
9. ELECTRIC OPERATION
10. CHAIN HOIST
11. FUSIBLE LINK, EA. SIDE
12. UNINSULATED
13. INSULATED
14. 4" HEAD
15. PRIVACY LOCK
16. PIVOT HINGES
17. PUSH/PULL HARDWARE
18. WALL STOP
19. FLOOR STOP
20. KICK PLATES
21. SWEEP
22. PANIC HARDWARE
23. SLIDE BOLT LOCK
24. UNDERCUT DOOR 3/4"
25. HANDICAP POWER ASSIST

GENERAL DOOR NOTES:

A HARDWARE SCHEDULE SHALL BE SUPPLIED BY THE VENDOR & APPROVED BY THE OWNER. VENDOR SHALL ALSO SUPPLY CUT SHEETS, MAINTENANCE AND ADJUSTMENT MANUAL FOR ALL HARDWARE SUPPLIED. VENDOR SHALL ALSO GIVE OWNER AN ANALYSIS OF THE KEYING OF THIS PROJECT.

B DOOR HARDWARE SHALL BE LEVER TYPE OR PUSH PULL TYPE.

C SEE GENERAL NOTES & SPECIFICATIONS FOR OTHER INFORMATION.

D THRESHOLDS SHALL BE NO HIGHER THAN 1/2" ABOVE FIN. FLR. EDGE TO BE BEVELED WITH A SLOPE NO GREATER THAN 1 IN 2, IF HIGHER THAN 1/4" ABOVE FIN. FLR.

E. JAMB WIDTHS AT METAL FRAMES ARE BASED ON 1/2" RETURNS, DOOR SUPPLIER MAY ADJUST TO NEXT PRACTICAL THROAT SIZE.

F. U VALUES FOR OVERHEAD DOOR = 1.17, PERSONNEL DOORS = .51, GLASS DOORS = 1.04 (S.H.G.F. = .65 MAX.).

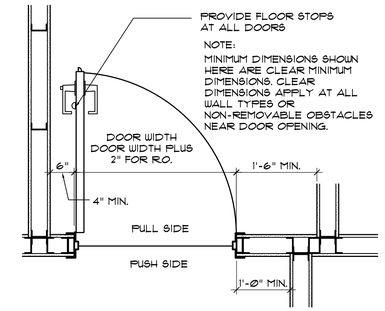

2 TYPICAL DOOR LAYOUT U.N.O.
1 1/2" = 1'-0"
08050aaa

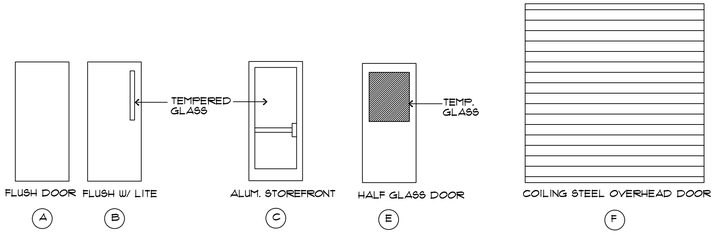

1 DOOR ELEVATIONS
N.T.S.

ALPHA BLDG SET 08-27-2024

STATE OF GEORGIA
E. MICHAEL SHADLEY
CERTIFICATE NO. 21147
REGISTERED ARCHITECT

Beta Design Group, Inc.
Architecture
2118 Rosser Place Stone Mountain, GA. 30087
Phone: 770.491.9250
Email: mikes@betadesigngroup.com

Client:
SUNBELT BUILDERS™
1084 HWY 8 COVINGTON GA 30014 770 788 0101

Project:
R. L. COUSINS COMMUNITY CENTER
NEWTON CO. BOC RFP #24-04
8134 GEIGER STREET, N.W.
COVINGTON, GEORGIA

Issue Date:	Initial	Drwg. Revision Description:
07/11/24	E.M.S.	1. DRWG. COORD. W/ CONTR.

Project No.: 2023012
Drwg. Date: 06/28/24
Drwg. Revision: 07/11/24
Drawn By: B.D.G.
Checked By: E.M.S.
File Name: 2023012 A-3.2.1

Sheet Title:
DOOR SCHED. & DETAILS

Sheet No.:
A-3.2.1

phase two, for construction

© BETA DESIGN GROUP, INC. 2024. This drawing may be utilized only for the purpose of constructing or installing the work shown thereon at the site of the work specified. Any other use of this drawing, including without limitation any reproduction or alteration of this drawing, without the prior written approval of Beta Design Group, Inc. is prohibited.

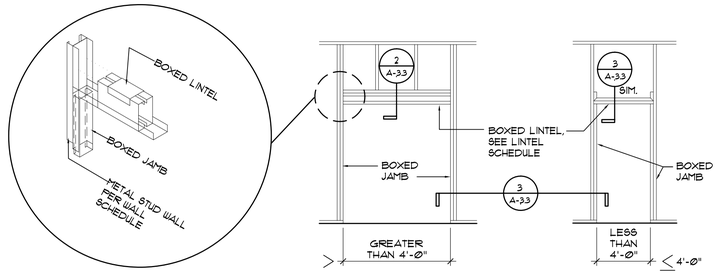

1 METAL STUD WALL OPENING DETAIL

NOT TO SCALE 0911Oaab

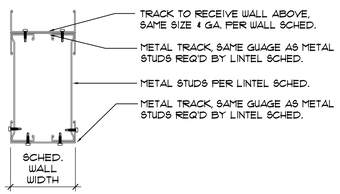

2 LINTEL DETAIL

NOT TO SCALE 0911Oaab

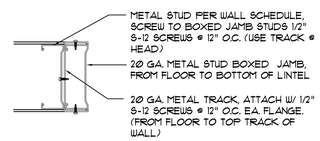

3 BOX JAMB

NOT TO SCALE 0911Oaab

METAL STUD BOXED LINTEL SCHEDULE	
SPAN OPENING	STUD SIZE
UP TO 4'-0"	362S125-18*
> 4'-0" TO 6'-0"	600S125-30
> 6'-0" TO 8'-0"	600S125-43

* USE A MINIMUM OF 362S125-30 @ EXTERIOR LOCATIONS

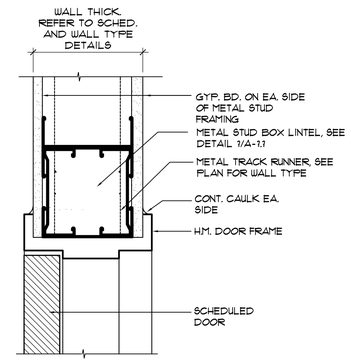

4 HOLLOW METAL DOOR HEAD DETAIL

3" = 1'-0" 0811Oaat

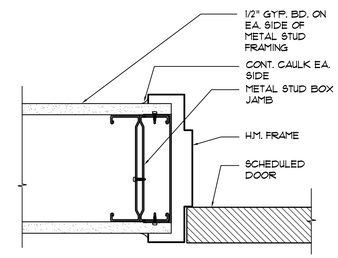

5 HOLLOW METAL DOOR JAMB DETAIL

3" = 1'-0" 0811Oaat

ALPHA BLDG SET 08-27-2024

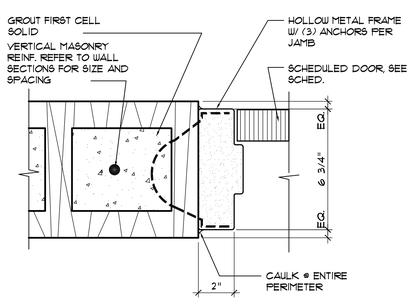

6 HOLLOW METAL DOOR JAMB AT MASONRY

3" = 1'-0" 0811Oaar

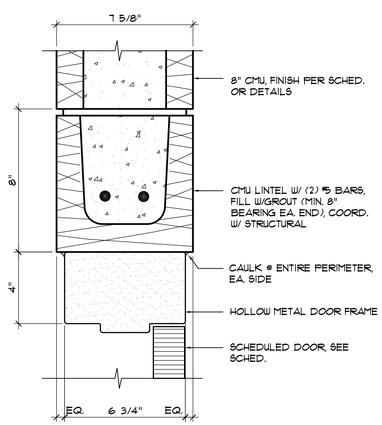

7 HOLLOW METAL DOOR HEAD AT MASONRY

3" = 1'-0" 0811Oaar

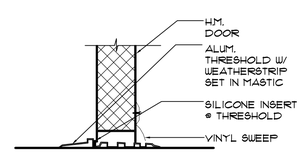

8 TYP. DOOR SILL

1 1/2"=1'-0" 0811Otha

phase two, for construction

© BETA DESIGN GROUP, INC. 2024 This drawing may be utilized only for the purpose of constructing or installing the work shown thereon at the site of the work specified. Any other use of this drawing, including without limitation any reproduction or alteration of this drawing, without the prior written approval of Beta Design Group, Inc. is prohibited.

STATE OF GEORGIA — E. Michael Shultz — REGISTERED ARCHITECT — CERTIFICATE NO. 019

Beta Design Group, Inc.
Architecture
2118 Rosser Place Stone Mountain, GA. 30087
Phone: 770.491.9250
Email: mikes@betadesigngroup.com

Client:
SUNBELT BUILDERS™
10841 HWY 9 CONYERS GA 30014 770.388.0101

Project:
R. L. COUSINS COMMUNITY CENTER
NEWTON CO. BOC RFP #24-04
8134 GEIGER STREET, N.W.
COVINGTON, GEORGIA

Issue Date:	Initial:	Drwg. Revision Description:

Project No.: 2023012
Drwg. Date: 06/28/24
Drwg. Revision:
Drawn By: B.D.G.
Checked By: E.M.S.
File Name: 2023012 A-3.3.1

Sheet Title: DOOR DETAILS

Sheet No.: A-3.3.1

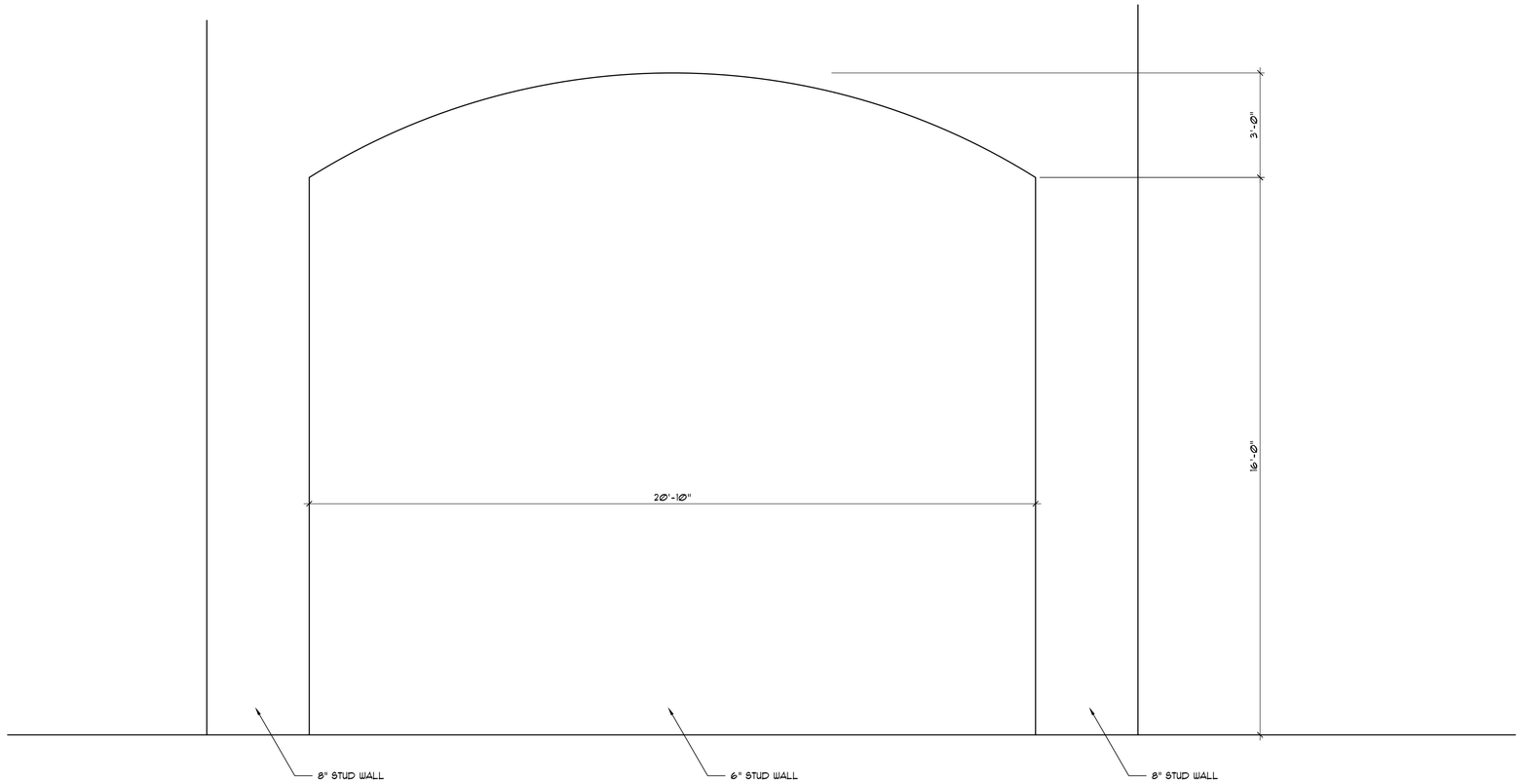

1 INTERIOR ELEVATION
1/2" = 1'-0"

ALPHA BLDG SET 08-27-2024

phase two, for construction

© BETA DESIGN GROUP, INC. 2024 This drawing may be utilized only for the purpose of constructing or installing the work shown thereon at the site of the work specified. Any other use of this drawing, including without limitation any reproduction or alteration of this drawing, without the prior written approval of Beta Design Group, Inc. is prohibited.

Issue Date:	Initial:	Drwg. Revision Description:
07/11/24	E.M.S.	1. NEW SHEET ADDED

Project:
R. L. COUSINS COMMUNITY CENTER
NEWTON CO. BOC RFP #24-04
8134 GEIGER STREET, N.W.
COVINGTON, GEORGIA

Client:
SUNBELT BUILDERS™
10841 HWY 9 CONYERS GA 30014 770 388 0 1 770 388 046

Beta Design Group, Inc.
Architecture
2118 Rosser Place Stone Mountain, GA. 30087
Phone: 770 491 9250
Email: mikes@betadesigngroup.com

STATE OF GEORGIA
E. MICHAEL SHADLEY
CERTIFICATE NO. 21318
REGISTERED ARCHITECT

Project No.: 2023012
Drwg. Date: 07/11/24
Drwg. Revision:
Drawn By: B.D.G.
Checked By: E.M.S.
File Name: 2023012 A-3.5

Sheet Title:
INTERIOR ELEVATIONS

Sheet No.:
A-3.5

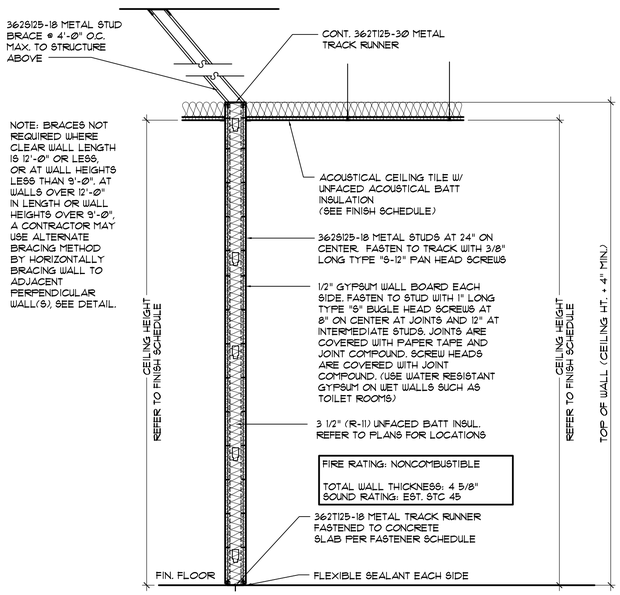

W1 — 3 5/8" NONCOMBUSTIBLE AND NONLOAD-BEARING PARTITION

3/4" = 1'-0" 09250wsa

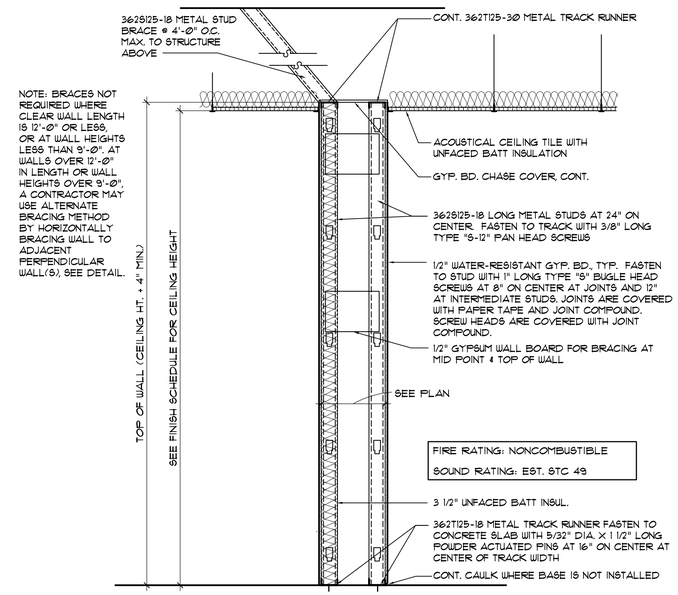

W5 — PLUMBING PARTITION

3/4" = 1'-0" 09250wsk

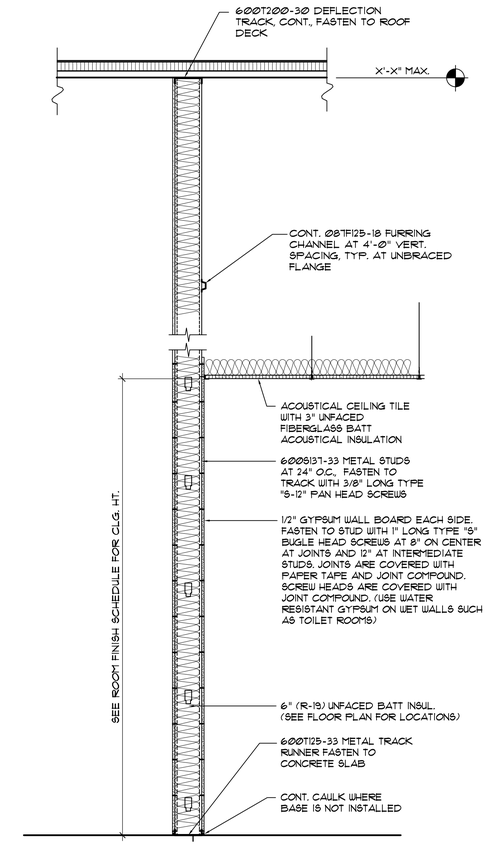

W9 — 6" NONCOMBUSTIBLE AND NONLOAD-BEARING PARTITION

3/4" = 1'-0" 09250wso

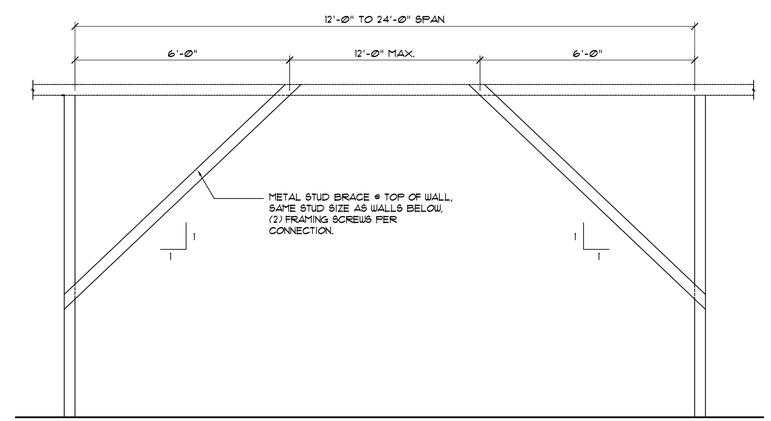

1 — WALL BRACING DETAIL

1/2" = 1'-0" 09110bra

NOTE:
BRACING NOT REQUIRED FOR WALLS NOT OVER 9'-0" HIGH OR LESS THAN 12'-0" IN HORIZONTAL CLEAR SPAN.
CORNER BRACING REQ'D FOR WALLS OVER 9'-0" HIGH SPANNING OVER 12'-0" TO 24'-0"

ALPHA BLDG SET 08-27-2024

phase two, for construction

© BETA DESIGN GROUP, INC. 2024 This drawing may be utilized only for the purpose of constructing or installing the work shown thereon at the site of the work specified. Any other use of this drawing, including without limitation any reproduction or alteration of this drawing, without the prior written approval of Beta Design Group, Inc. is prohibited.

STATE OF GEORGIA — E. MICHAEL SHULER — REGISTERED ARCHITECT — CERTIFICATE NO. 019767

Beta Design Group, Inc.
Architecture
2118 Rosser Place Stone Mountain, GA. 30087
Phone: 770.491.9250
Email: mikes@betadesigngroup.com

Client:
SUNBELT BUILDERS™
10841 HWY 8 COVINGTON GA 30014 770.788.0101

Project:
R. L. COUSINS COMMUNITY CENTER
NEWTON CO. BOC RFP #24-04
8134 GEIGER STREET, N.W.
COVINGTON, GEORGIA

Issue Date:	Initial:	Drwg. Revision Description:

Project No.: 2023012
Drwg. Date: 06/28/24
Drwg. Revision:
Drawn By: B.D.G.
Checked By: E.M.S.
File Name: 2023012 A-4.1.4

Sheet Title: WALL TYPE DETAILS

Sheet No.: A-4.1.4

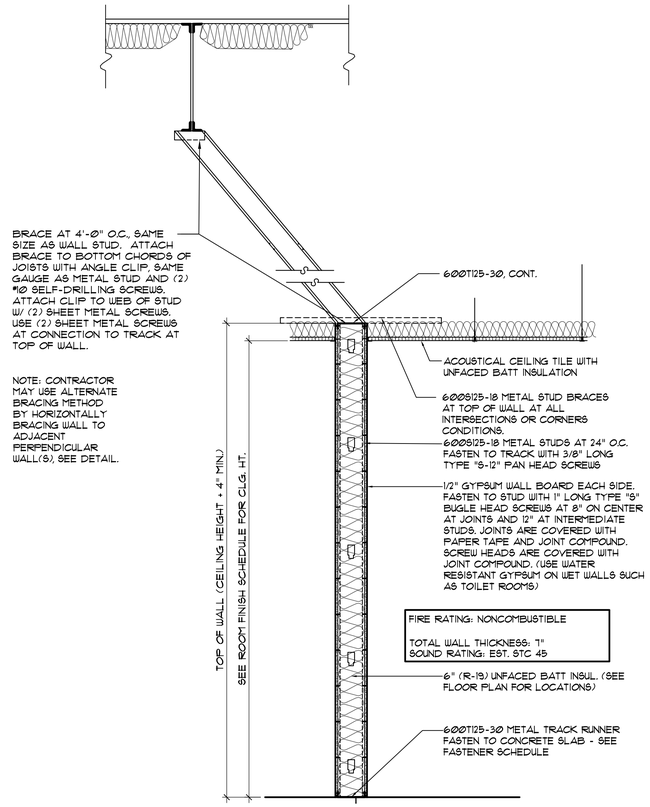

6" NONCOMBUSTIBLE AND NONLOAD-BEARING PARTITION

W10 — 3/4" = 1'-0" — 09250WSC

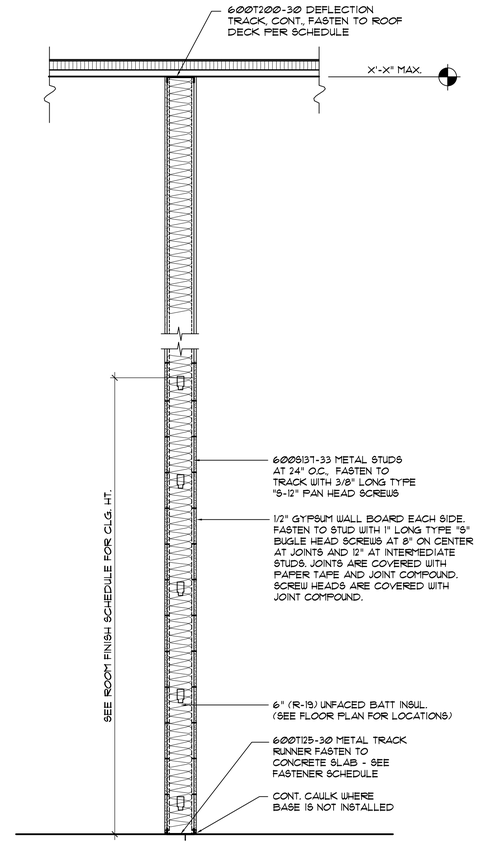

6" NONCOMBUSTIBLE AND NONLOAD-BEARING PARTITION

W11 — 3/4" = 1'-0" — 09250WSO

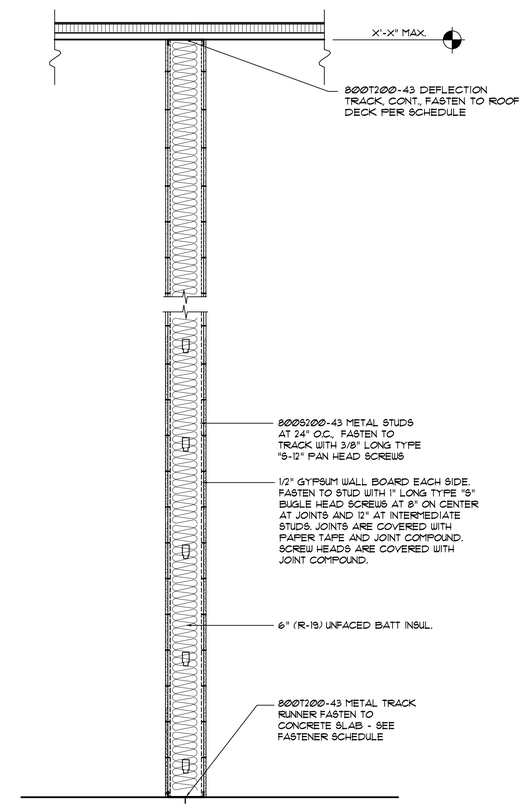

8" NONCOMBUSTIBLE AND NONLOAD-BEARING PARTITION

W12 — 3/4" = 1'-0" — 09250WSO

ALPHA BLDG SET 08-27-2024

phase two, for construction

© BETA DESIGN GROUP, INC. 2024 This drawing may be utilized only for the purpose of constructing or installing the work shown thereon at the site of the work specified. Any other use of this drawing, including without limitation any reproduction or alteration of this drawing, without the prior written approval of Beta Design Group, Inc. is prohibited.

STATE OF GEORGIA — E. MICHAEL SHULER — LICENSE NO. 20087 — CERTIFICATE OF REGISTRATION — REGISTERED ARCHITECT

Beta Design Group, Inc.
Architecture
2118 Rosser Place Stone Mountain, GA. 30087
Phone: 770 491 9250
Email: mikes@betadesigngroup.com

Client:
SUNBELT BUILDERS™
10841 HWY 8 OCOEE/WITON GA 30014 770 988 0101

Project:
R. L. COUSINS COMMUNITY CENTER
NEWTON CO. BOC RFP #24-04
8134 GEIGER STREET, N.W.
COVINGTON, GEORGIA

Issue Date:	Initial:	Drwg. Revision Description:

Project No.: 2023012
Drwg. Date: 06/28/24
Drwg. Revision:
Drawn By: B.D.G.
Checked By: E.M.S.
File Name: 2023012 A-4.1.5

Sheet Title: WALL TYPE DETAILS

Sheet No.: A-4.1.5

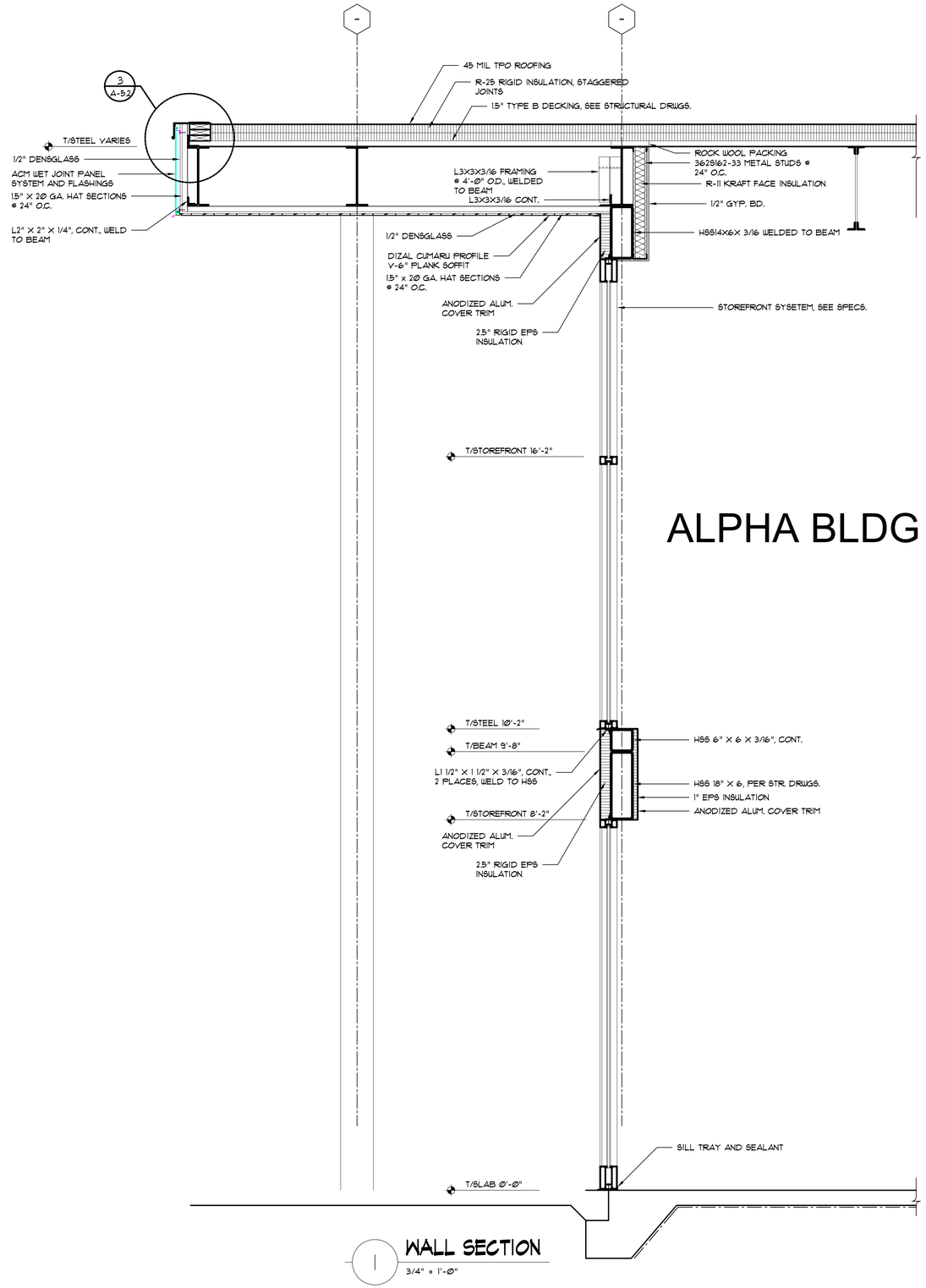

1 WALL SECTION
3/4" = 1'-0"

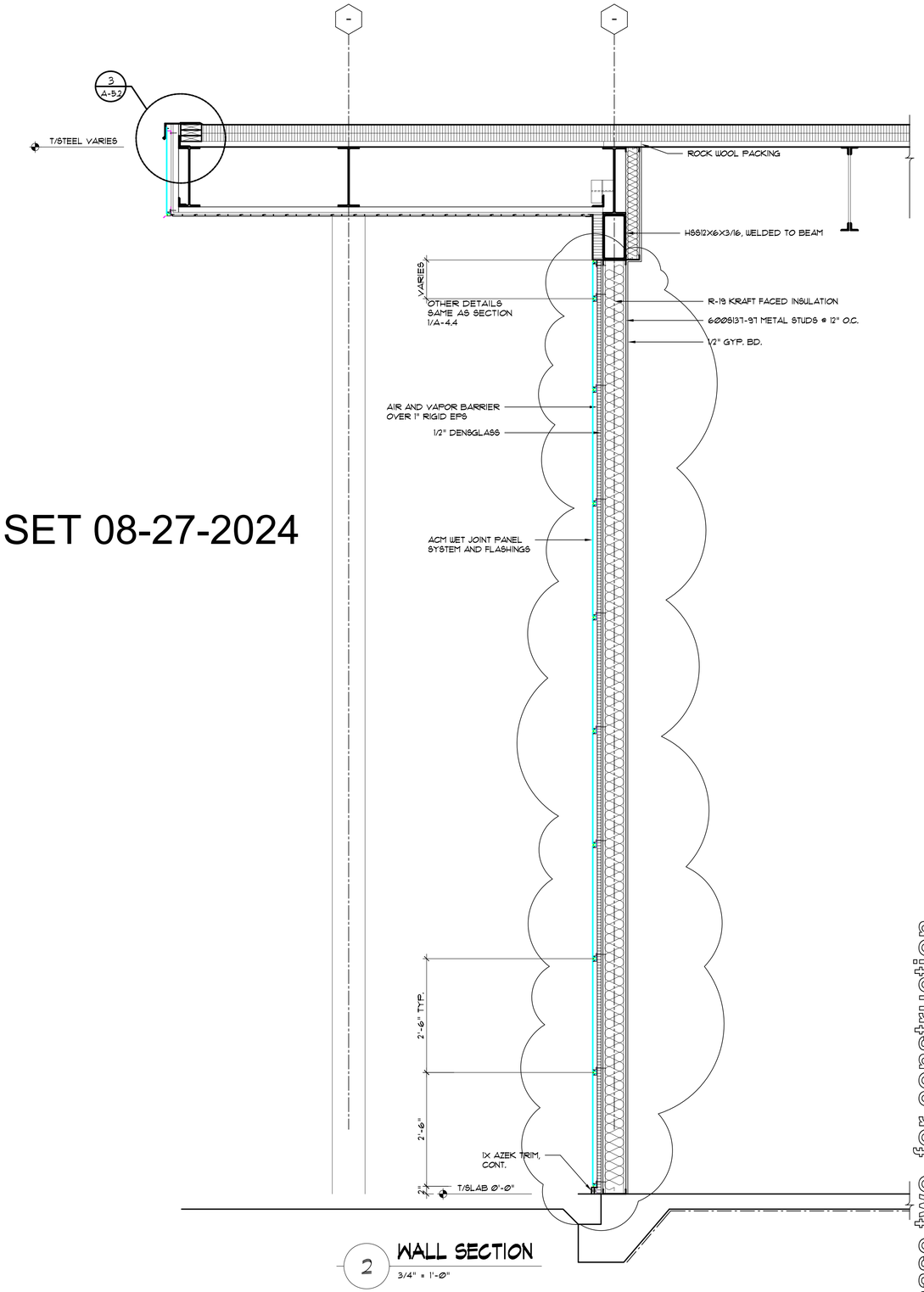

2 WALL SECTION
3/4" = 1'-0"

ALPHA BLDG SET 08-27-2024

phase two, for construction

STATE OF GEORGIA
E. MICHAEL SHADLEY
CERTIFICATE NO.
REGISTERED ARCHITECT

Beta Design Group, Inc.
Architecture
2118 Rosser Place Stone Mountain, GA. 30087
Phone: 770 491 9250
Email: mikes@betadesigngroup.com

Client:
sunbelt BUILDERS™
10841 HWY 9 CUMMINGS GA 30014 770 998 0 1 770 998 046

Project:
R. L. COUSINS COMMUNITY CENTER
NEWTON CO. BOC RFP #24-04
8134 GEIGER STREET, N.W.
COVINGTON, GEORGIA

Issue Date:	Initial:	Drwg. Revision Description:
07/11/24	E.M.S.	1. DRWG. COORD. W/ CONTR.

Project No.: 2023012
Drwg. Date: 06/28/24
Drwg. Revision: 07/11/24
Drawn By: B.D.G.
Checked By: E.M.S.
File Name: 2023012 A-4.4

Sheet Title:
WALL SECTIONS

Sheet No.:
A-4.4

© BETA DESIGN GROUP, INC. 2024 This drawing may be utilized only for the purpose of constructing or installing the work shown thereon at the site of the work specified. Any other use of this drawing, including without limitation any reproduction or alteration of this drawing, without the prior written approval of Beta Design Group, Inc. is prohibited.

ALPHA BLDG SET 08-27-2024

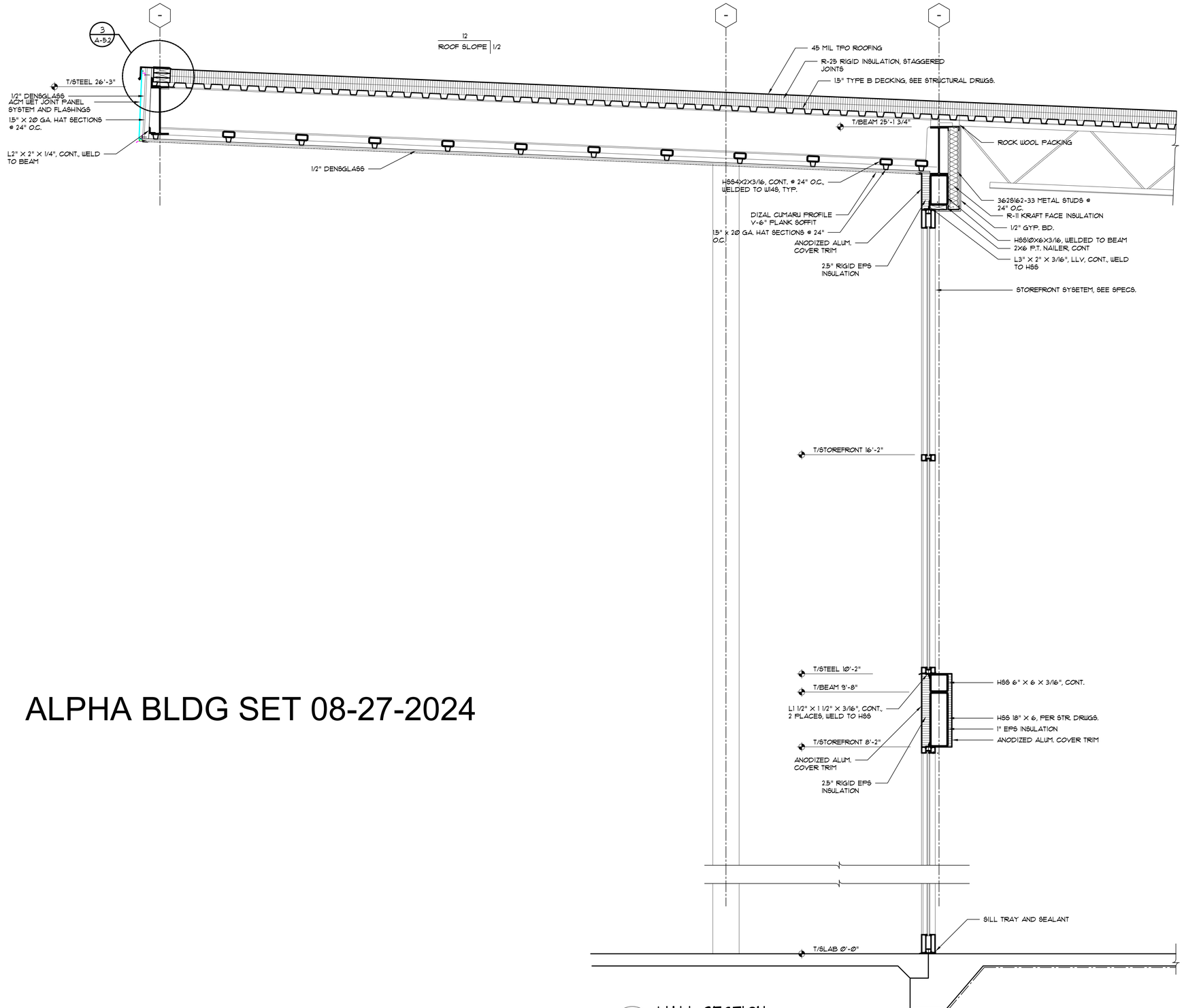

1 WALL SECTION
3/4" = 1'-0"

phase two, for construction

© BETA DESIGN GROUP, INC. 2024 This drawing may be utilized only for the purpose of constructing or installing the work shown thereon at the site of the work specified. Any other use of this drawing, including without limitation any reproduction or alteration of this drawing, without the prior written approval of Beta Design Group, Inc. is prohibited.

STATE OF GEORGIA
E. MICHAEL SHULER
CERTIFICATE NO. 019
REGISTERED ARCHITECT

Beta Design Group, Inc.
Architecture
2118 Rosser Place Stone Mountain, GA. 30087
Phone: 770.491.9250
Email: mikes@betadesigngroup.com

Client:
SUNBELT BUILDERS™
10841 HWY 9 CUMMING GA 30014 770.888.0101

Project:
R. L. COUSINS COMMUNITY CENTER
NEWTON CO. BOC RFP #24-04
8134 GEIGER STREET, N.W.
COVINGTON, GEORGIA

Issue Date:	Initial:	Drwg. Revision Description:

Project No.: 2023012
Drwg. Date: 06/28/24
Drwg. Revision:
Drawn By: B.D.G.
Checked By: E.M.S.
File Name: 2023012 A-4.5

Sheet Title:
WALL SECTIONS

Sheet No.:
A-4.5

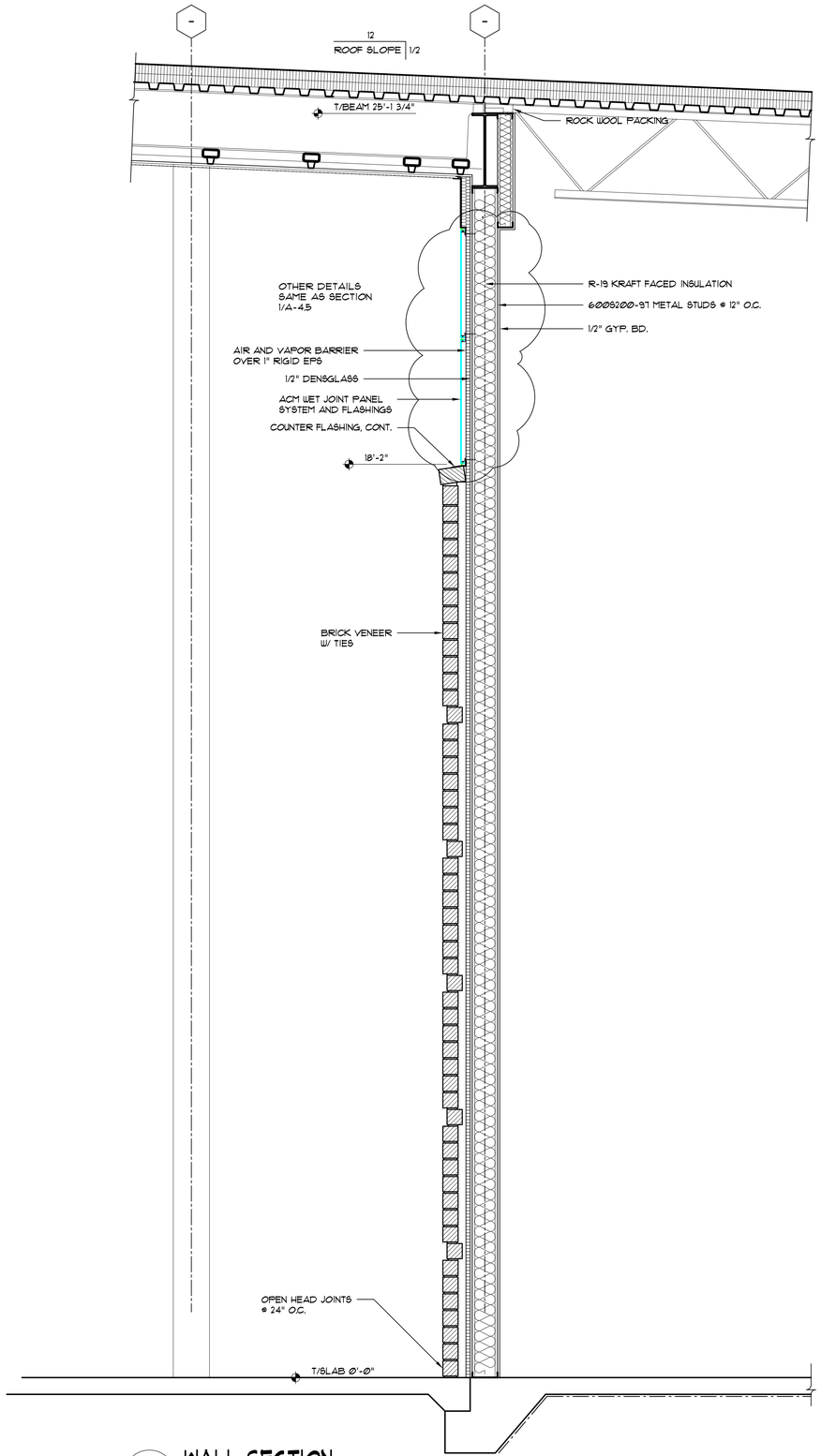

1 WALL SECTION
3/4" = 1'-@"

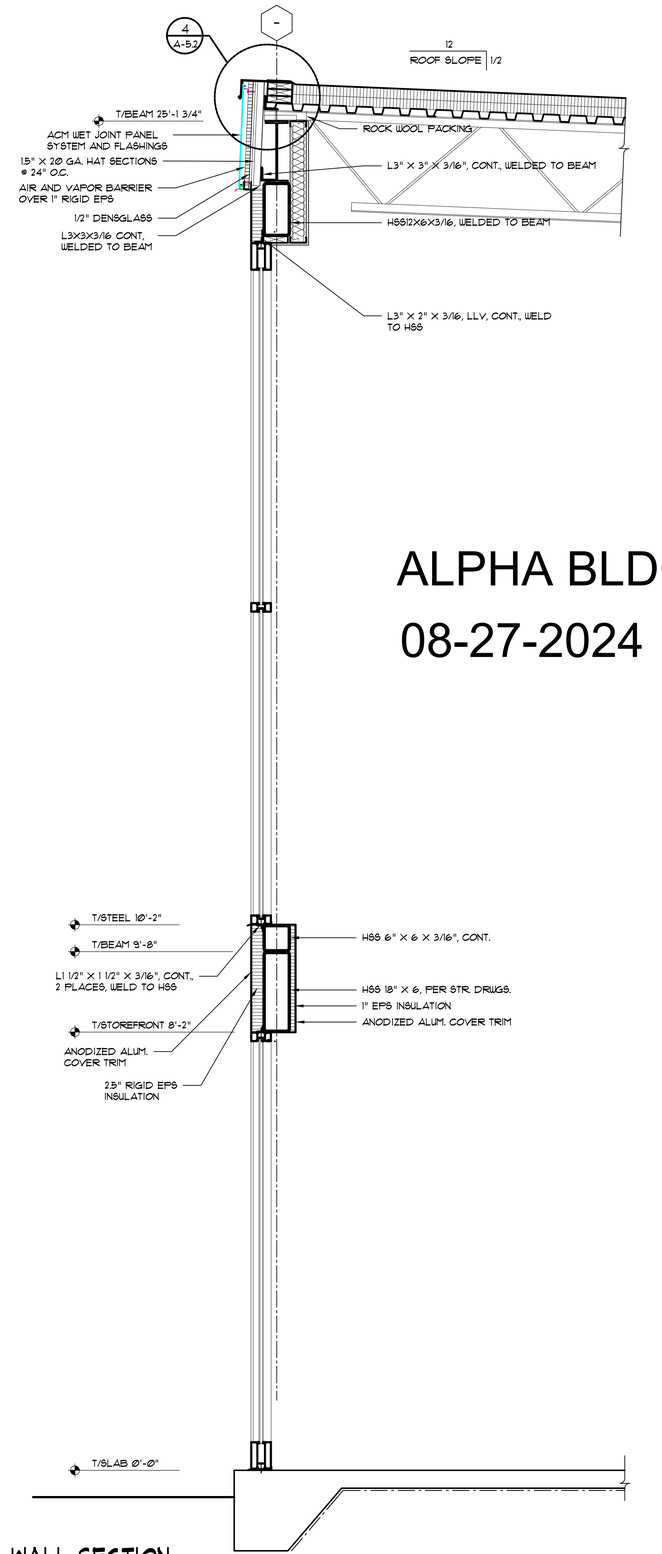

2 WALL SECTION
3/4" = 1'-@"

ALPHA BLDG SET

08-27-2024

phase two, for construction

© BETA DESIGN GROUP, INC. 2024 This drawing may be utilized only for the purpose of constructing or installing the work shown thereon at the site of the work specified. Any other use of this drawing, including without limitation any reproduction or alteration of this drawing, without the prior written approval of Beta Design Group, Inc. is prohibited.

STATE OF GEORGIA
E. MICHAEL SHADLEY
CERTIFICATE NO.
REGISTERED ARCHITECT

Beta Design Group, Inc.
Architecture
2118 Rosser Place Stone Mountain, GA. 30087
Phone: 770 491 9250
Email: mikes@betadesigngroup.com

Client:
SUNBELT BUILDERS™
10841 HWY 8 COVINGTON GA 30014 | 770 788 046

Project:
R. L. COUSINS COMMUNITY CENTER
NEWTON CO. BOC RFP #24-04
8134 GEIGER STREET, N.W.
COVINGTON, GEORGIA

Issue Date:	Initial:	Drwg. Revision Description:
07/11/24	E.M.S.	1. DRWG. COORD. W/ CONTR.

Project No.: 2023012
Drwg. Date: 06/28/24
Drwg. Revision: 07/11/24
Drawn By: B.D.G.
Checked By: E.M.S.
File Name: 2023012 A-4.6

Sheet Title:
WALL SECTIONS

Sheet No.:
A-4.6

ALPHA BLDG SET 08-27-2024

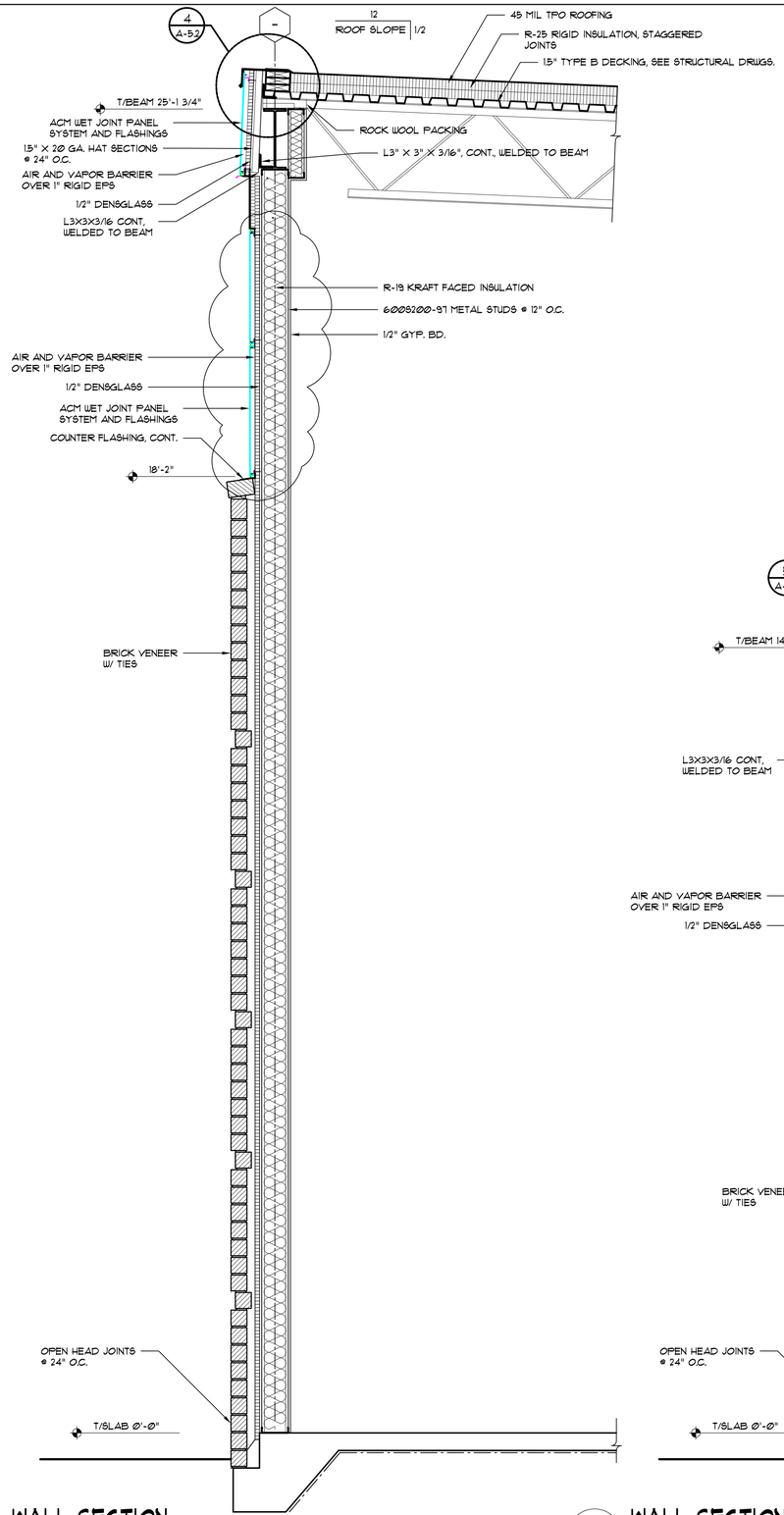

1 WALL SECTION
3/4" = 1'-0"

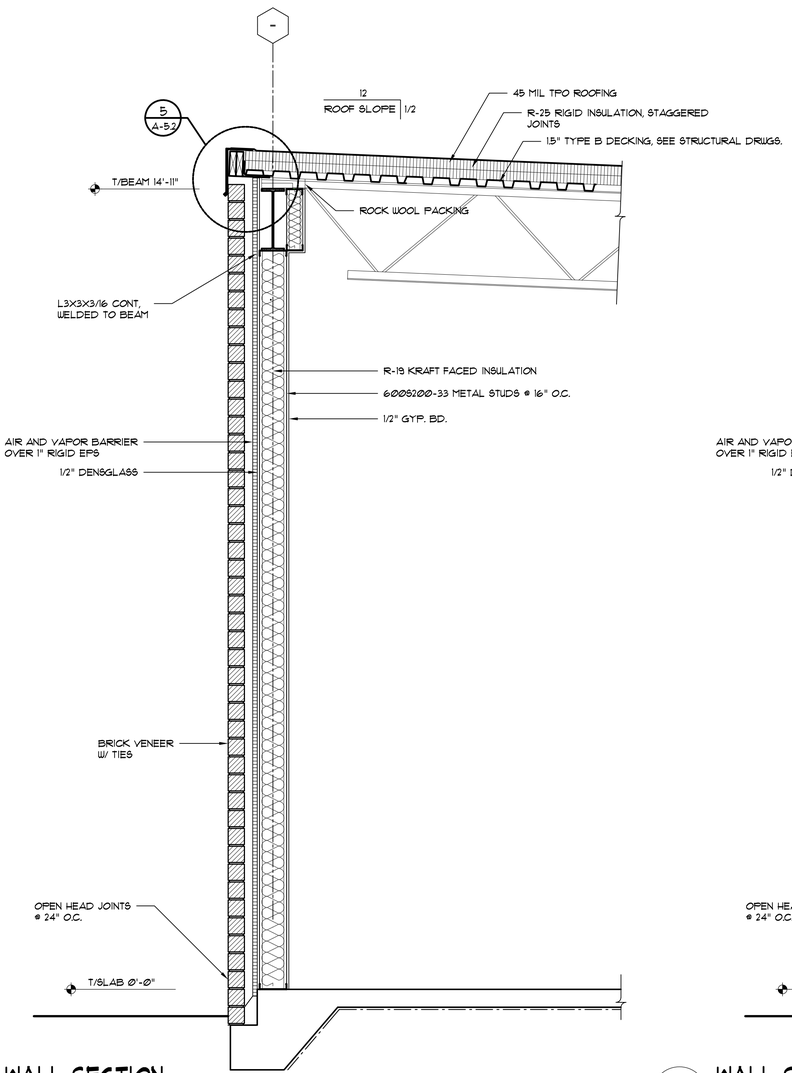

2 WALL SECTION
3/4" = 1'-0"

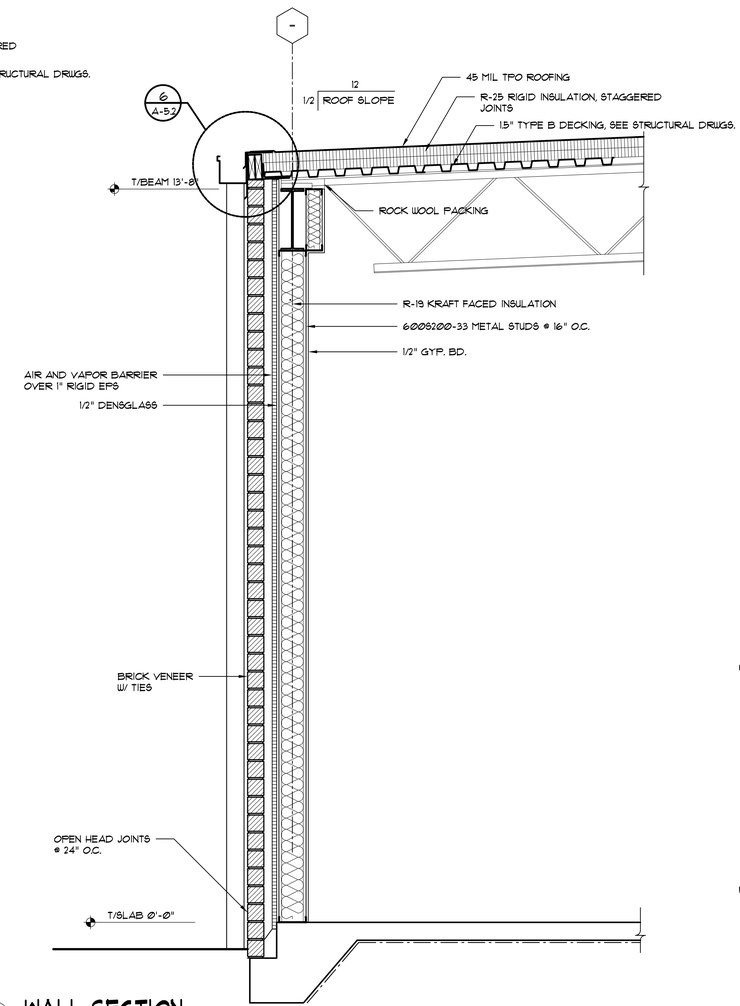

3 WALL SECTION
3/4" = 1'-0"

phase two, for construction

STATE OF GEORGIA
E. MICHAEL SHADLEY
CERTIFICATE NO. 019847
REGISTERED ARCHITECT

Beta Design Group, Inc.
Architecture
2118 Rosser Place Stone Mountain, GA. 30087
Phone: 770 491 9250
Email: mikes@betadesigngroup.com

Client:
SUNBELT BUILDERS™
10841 HWY 9 CONYERS GA 30014 770 388 0 1 770 388 046

Project:
R. L. COUSINS COMMUNITY CENTER
NEWTON CO. BOC RFP #24-04
8134 GEIGER STREET, N.W.
COVINGTON, GEORGIA

Issue Date:	Initial:	Drwg. Revision Description:
07/11/24	E.M.S.	1. DRWG. COORD. W/ CONTR.

Project No.: 2023012
Drwg. Date: 06/28/24
Drwg. Revision: 07/11/24
Drawn By: B.D.G.
Checked By: E.M.S.
File Name: 2023012 A-4.7

Sheet Title:
WALL SECTIONS

Sheet No.:
A-4.7

© BETA DESIGN GROUP, INC. 2024 This drawing may be utilized only for the purpose of constructing or installing the work shown thereon at the site of the work specified. Any other use of this drawing, including without limitation any reproduction or alteration of this drawing, without the prior written approval of Beta Design Group, Inc. is prohibited.

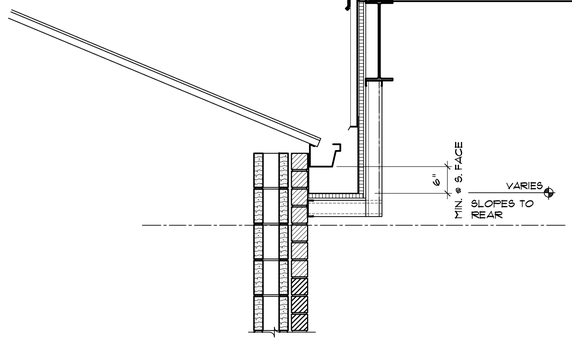

1 WALL SECTION
3/4" = 1'-0"

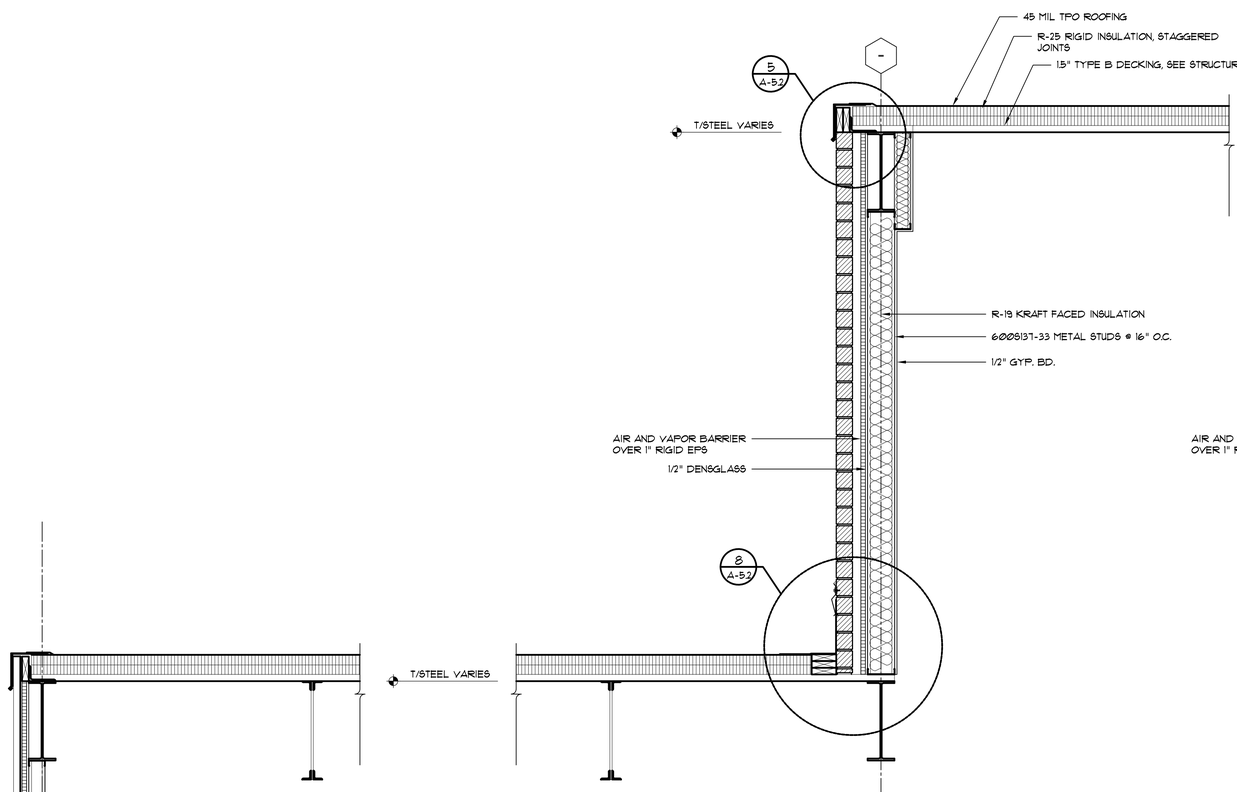

2 WALL SECTION
3/4" = 1'-0"

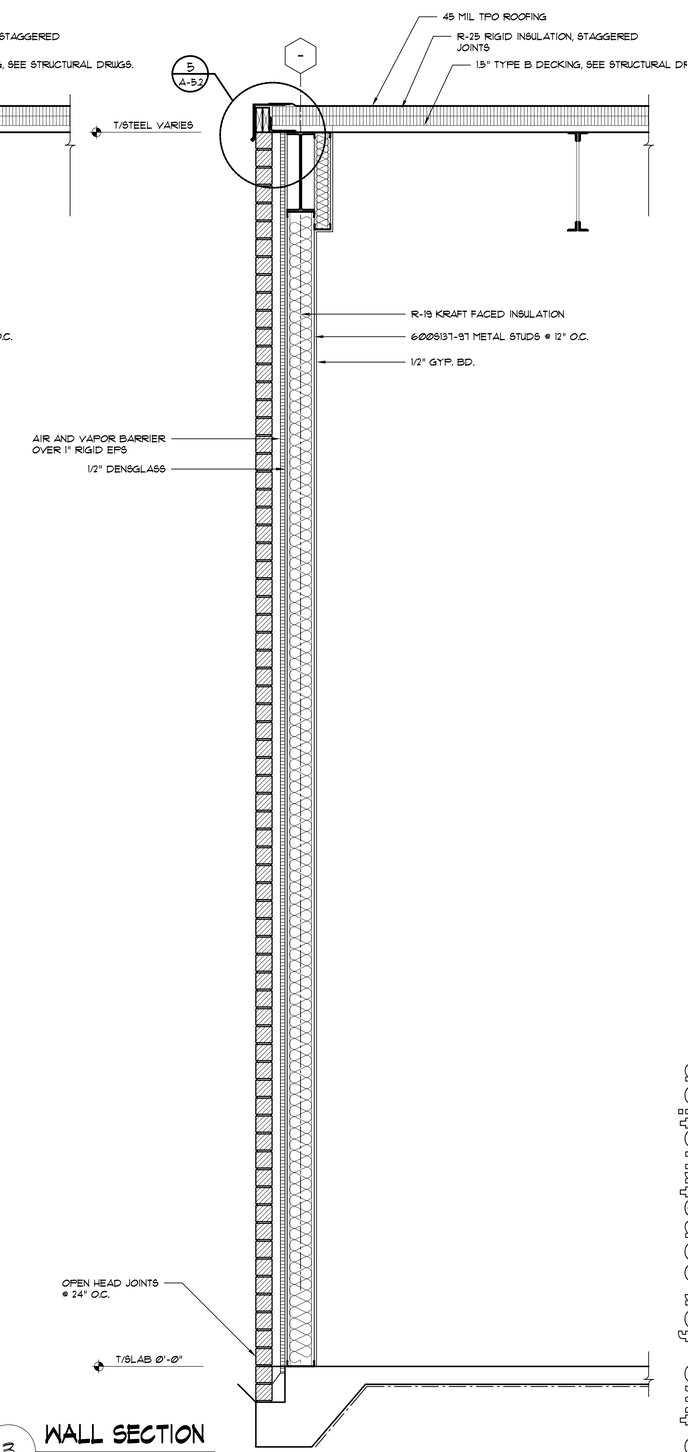

3 WALL SECTION
3/4" = 1'-0"

ALPHA BLDG SET 08-27-2024

phase two, for construction

STATE OF GEORGIA
E. MICHAEL SCHULTZ
REGISTERED ARCHITECT
CERTIFICATE NO.

Beta Design Group, Inc.
Architecture
2118 Rosser Place Stone Mountain, GA. 30087
Phone: 770 491 9250
Email: mikes@betadesigngroup.com

Client:
SUNBELT BUILDERS™
10841 HWY 9 CROWNTON GA 30014 770 788 0101

Project:
R. L. COUSINS COMMUNITY CENTER
NEWTON CO. BOC RFP #24-04
8134 GEIGER STREET, N.W.
COVINGTON, GEORGIA

Issue Date:	Initial:	Drwg. Revision Description:

Project No.: 2023012
Drwg. Date: 06/28/24
Drwg. Revision:
Drawn By: B.D.G.
Checked By: E.M.S.
File Name: 2023012 A-4.8

Sheet Title:
WALL SECTIONS

Sheet No.:
A-4.8

© BETA DESIGN GROUP, INC. 2024 This drawing may be utilized only for the purpose of constructing or installing the work shown thereon at the site of the work specified. Any other use of this drawing, including without limitation any reproduction or alteration of this drawing, without the prior written approval of Beta Design Group, Inc. is prohibited.

ALPHA BLDG SET 08-27-2024

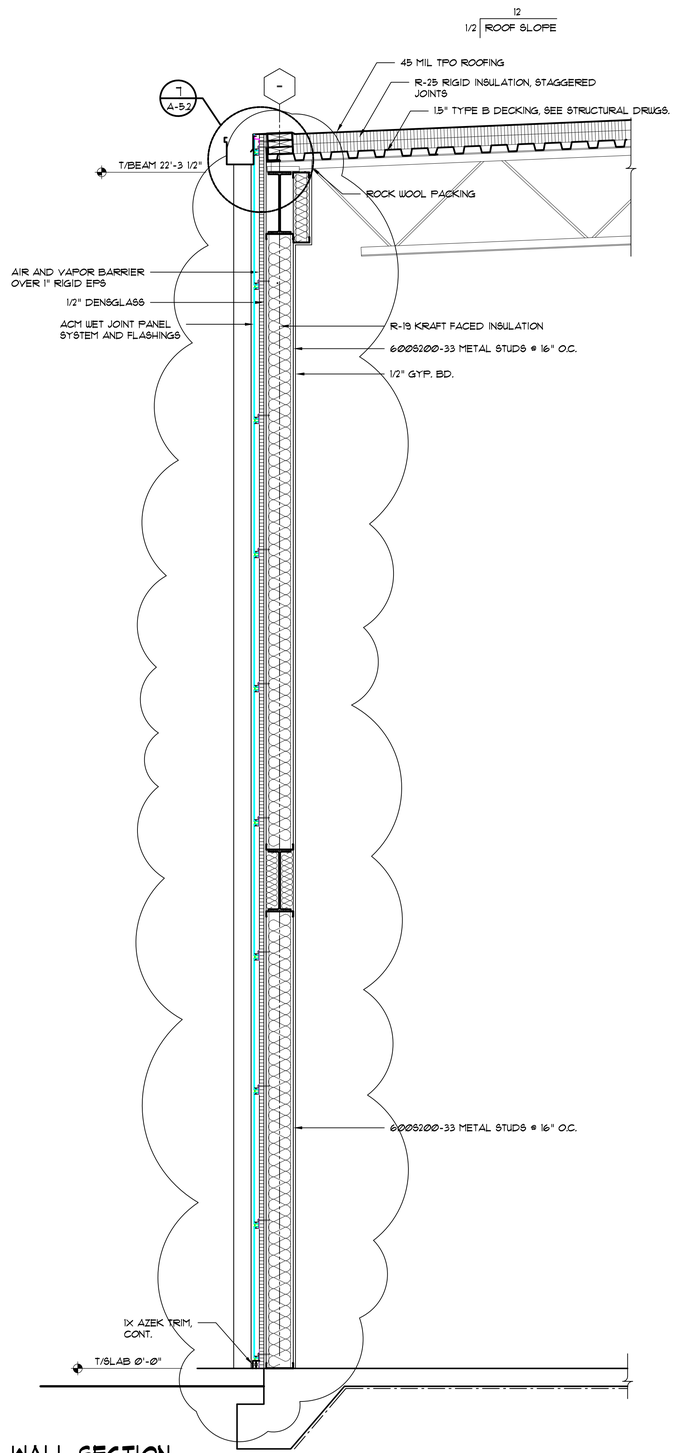

1 WALL SECTION
3/4" = 1'-0"

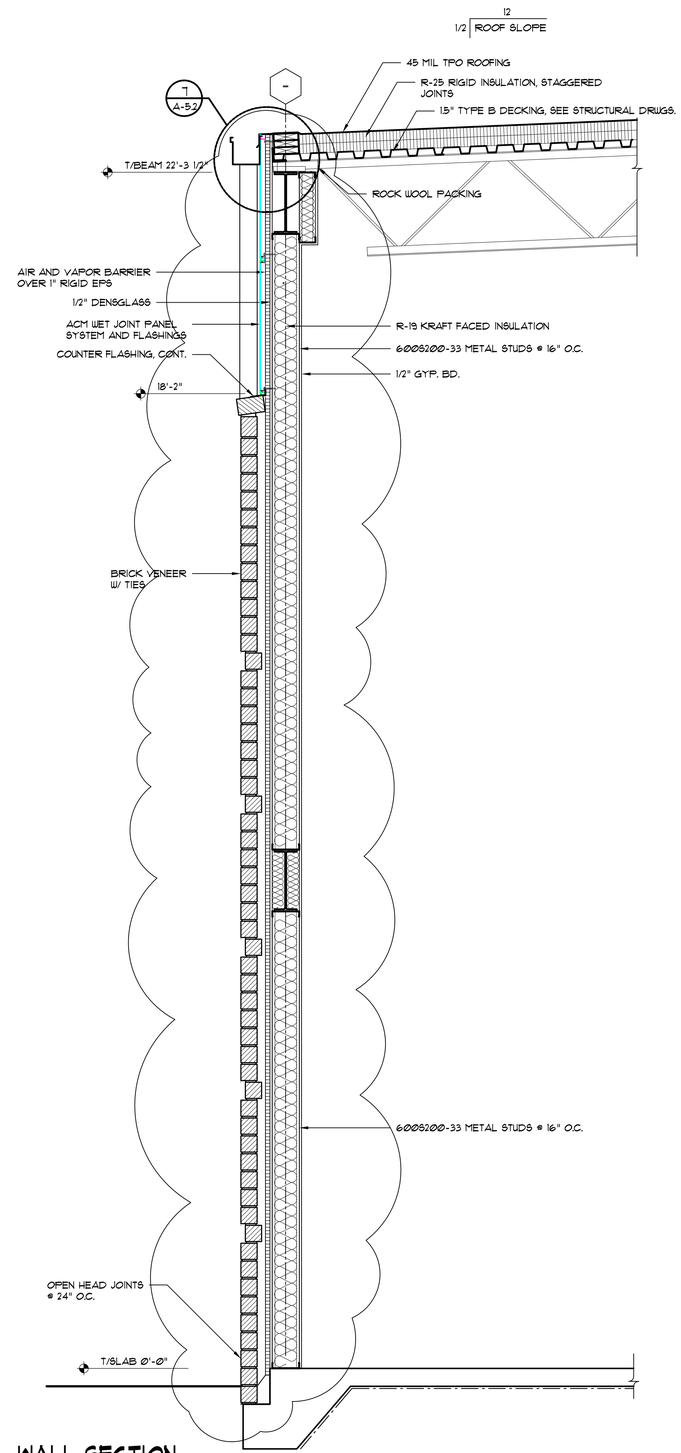

2 WALL SECTION
3/4" = 1'-0"

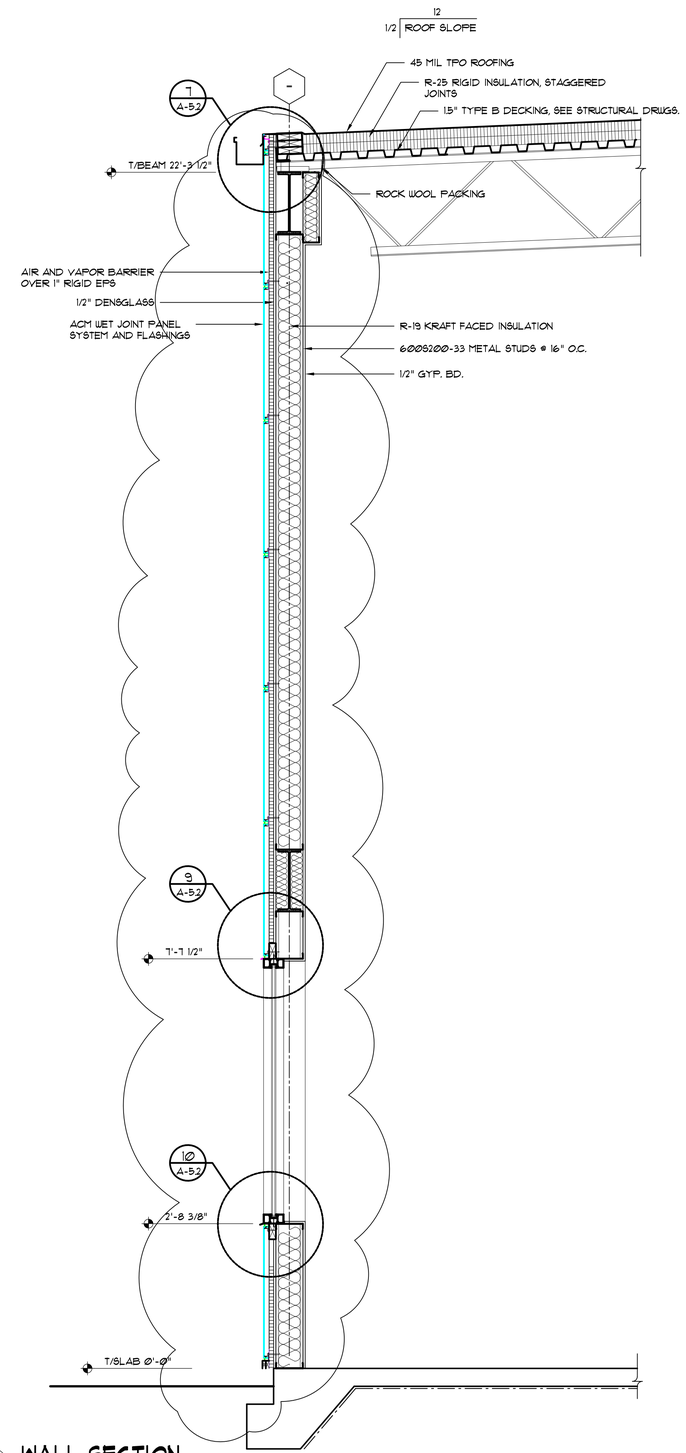

3 WALL SECTION
3/4" = 1'-0"

phase two, for construction

STATE OF GEORGIA
E. MICHAEL SHUMLEY
CERTIFICATE NO. 5172
REGISTERED ARCHITECT

Beta Design Group, Inc.
Architecture
2118 Rosser Place Stone Mountain, GA. 30087
Phone: 770.491.9250
Email: mikes@betadesigngroup.com

Client:
SUNBELT BUILDERS™
1084 HWY 8 GOLDMITH GA 0014 770 786 0 1 770 786 046

Project:
R. L. COUSINS COMMUNITY CENTER
NEWTON CO. BOC RFP #24-04
8134 GEIGER STREET, N.W.
COVINGTON, GEORGIA

Issue Date:	Initial:	Drwg. Revision Description:
07/11/24	E.M.S.	1. DRWG. COORD. W/ CONTR.

Project No.: 2023012
Drwg. Date: 06/28/24
Drwg. Revision: 07/11/24
Drawn By: B.D.G.
Checked By: E.M.S.
File Name: 2023012 A-4.9

Sheet Title:
WALL SECTIONS

Sheet No.:
A-4.9

© BETA DESIGN GROUP, INC. 2024 This drawing may be utilized only for the purpose of constructing or installing the work shown thereon at the site of the work specified. Any other use of this drawing, including without limitation any reproduction or alteration of this drawing, without the prior written approval of Beta Design Group, Inc. is prohibited.

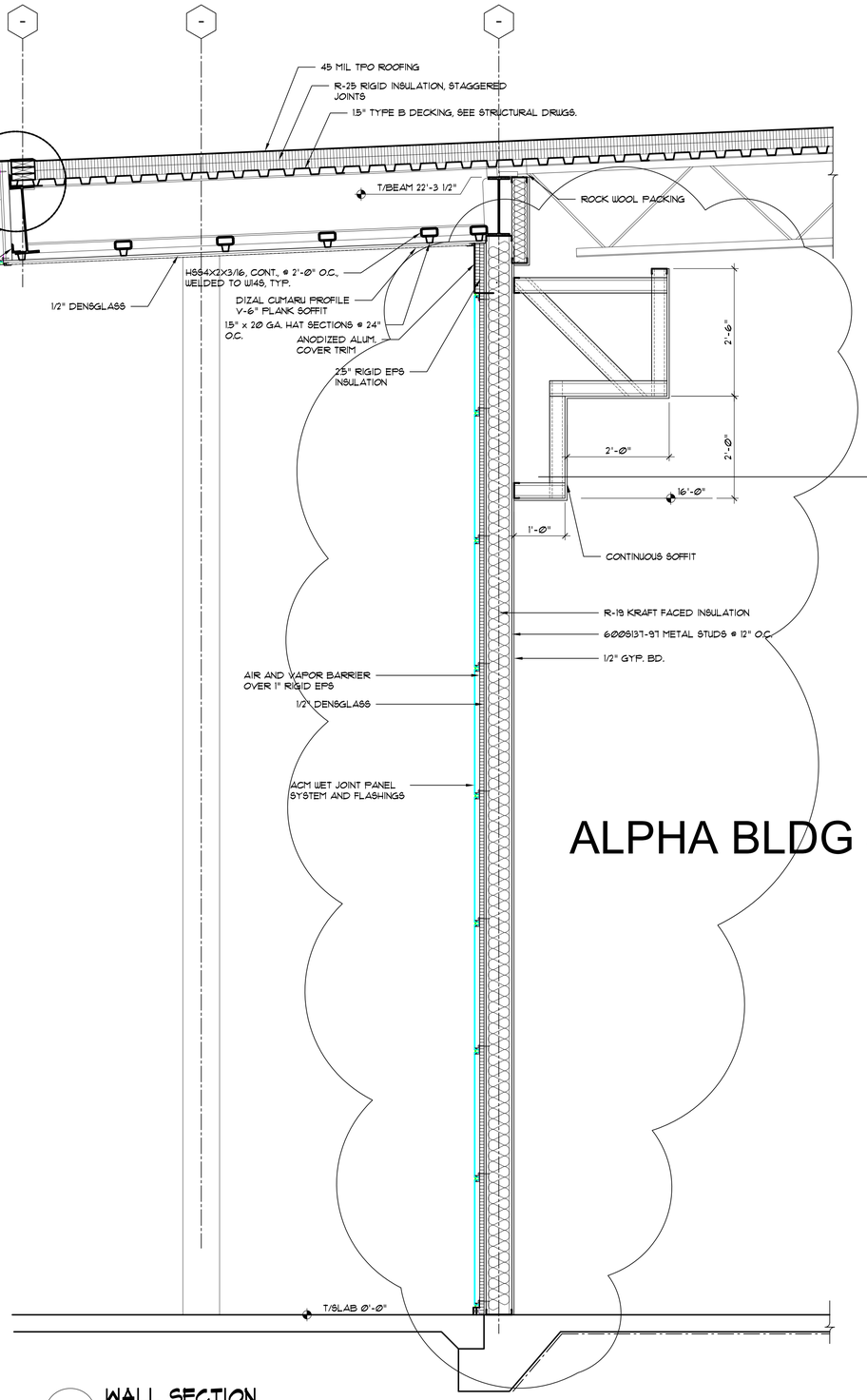

1 WALL SECTION
3/4" = 1'-0"

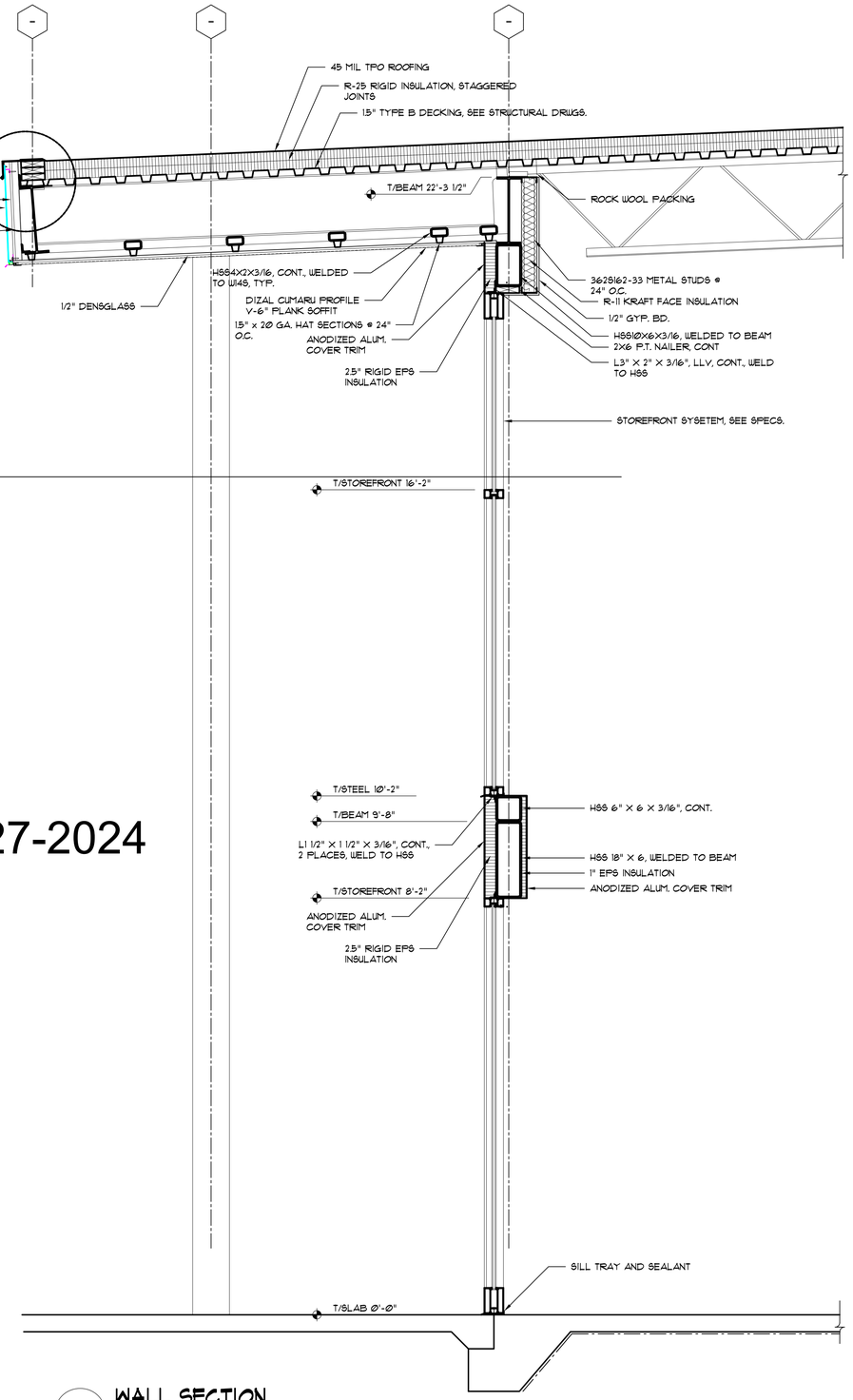

2 WALL SECTION
3/4" = 1'-0"

ALPHA BLDG SET 08-27-2024

phase two, for construction

STATE OF GEORGIA
E. MICHAEL SHADLEY
CERTIFICATE NO. 21-4
REGISTERED ARCHITECT

Beta Design Group, Inc.
Architecture
2118 Rosser Place Stone Mountain, GA. 30087
Phone: 770.491.9250
Email: mikes@betadesigngroup.com

Client:
SUNBELT BUILDERS™
10841 HWY 8 COVINGTON GA 30014 770.788.0046

Project:
R. L. COUSINS COMMUNITY CENTER
NEWTON CO. BOC RFP #24-04
8134 GEIGER STREET, N.W.
COVINGTON, GEORGIA

Issue Date:	Initial:	Drwg. Revision Description:
07/11/24	E.M.S.	1. DRW/ COORD. W/ CONTR.

Project No.: 2023012
Drwg. Date: 06/28/24
Drwg. Revision: 07/11/24
Drawn By: B.D.G.
Checked By: E.M.S.
File Name: 2023012 A-4.10

Sheet Title:
WALL SECTIONS

Sheet No.:
A-4.10

© BETA DESIGN GROUP, INC. 2024. This drawing may be utilized only for the purpose of constructing or installing the work shown thereon at the site of the work specified. Any other use of this drawing, including without limitation, any reproduction or alteration of this drawing, without the prior written approval of Beta Design Group, Inc. is prohibited.

ALPHA BLDG SET 08-27-2024

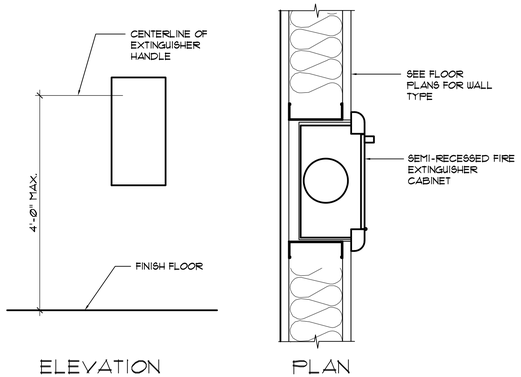

1 FIRE EXTNG. MOUNTING HEIGHT
1 1/2" = 1'-0" 10520aab

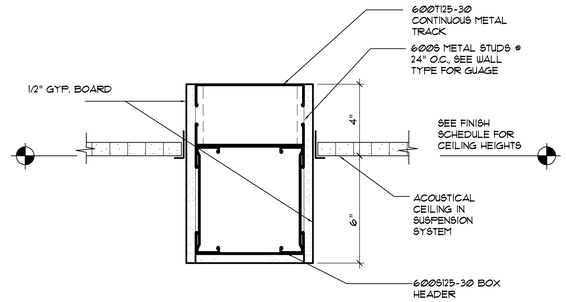

2 HEADER DETAIL
3" = 1'-0" 09120aab

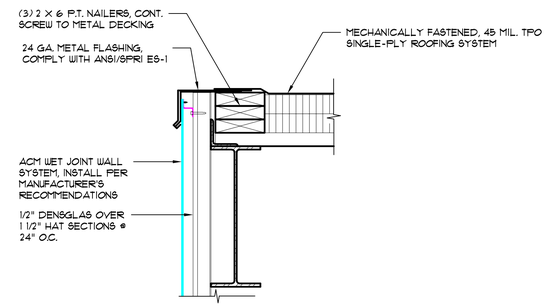

3 ROOF EDGE DETAIL
1 1/2" = 1'-0"

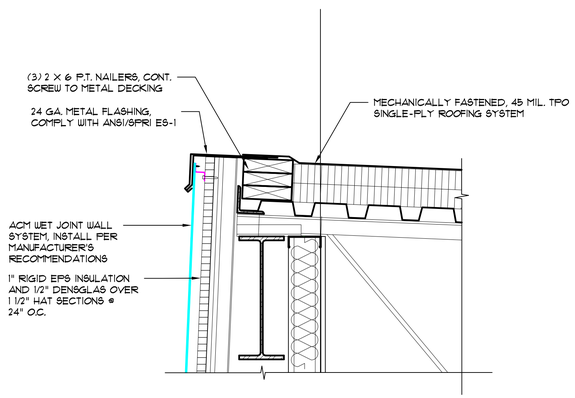

4 ROOF EDGE DETAIL
1 1/2" = 1'-0"

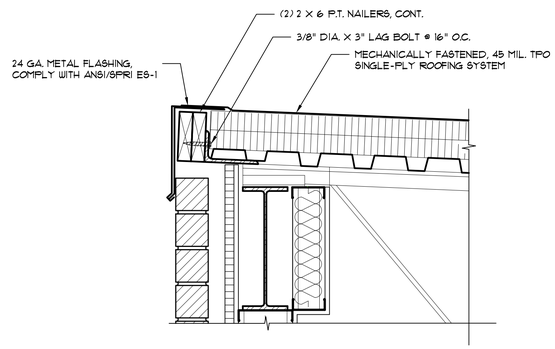

5 ROOF EDGE DETAIL
1 1/2" = 1'-0"

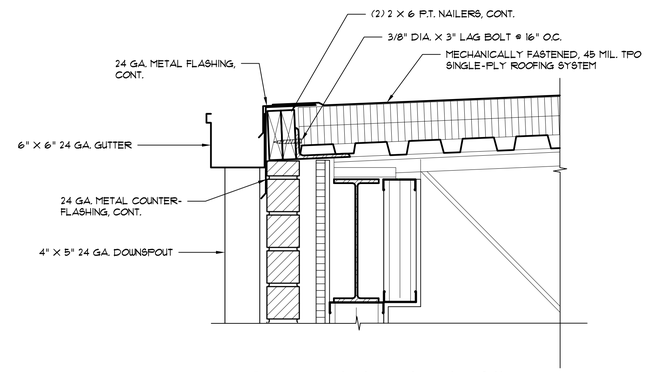

6 ROOF EDGE DETAIL
1 1/2" = 1'-0"

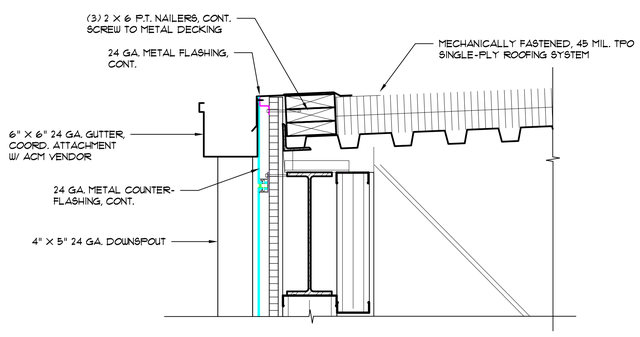

7 ROOF EDGE DETAIL
1 1/2" = 1'-0"

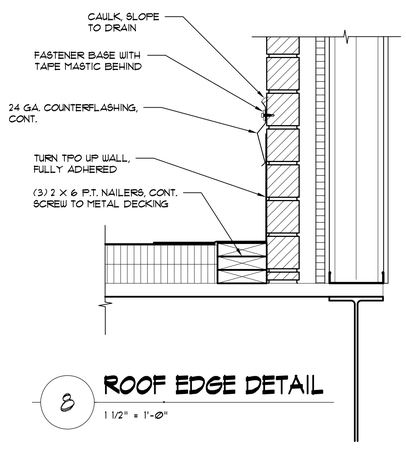

8 ROOF EDGE DETAIL
1 1/2" = 1'-0"

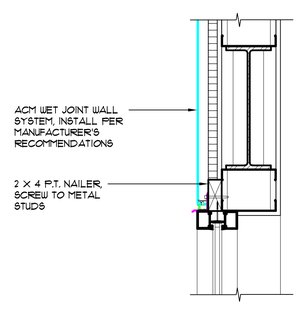

9 WINDOW DETAIL
1 1/2" = 1'-0"

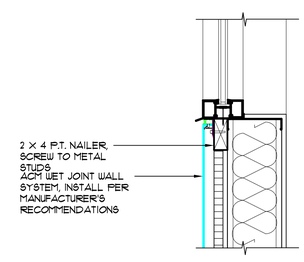

10 WINDOW DETAIL
1 1/2" = 1'-0"

phase two, for construction

STATE OF GEORGIA — E. Michael Shultz — STATE OF GEORGIA — CERTIFICATE NO. — REGISTERED ARCHITECT

Beta Design Group, Inc.
Architecture
2118 Rosser Place Stone Mountain, GA. 30087
Phone: 770.491.9250
Email: mikes@betadesigngroup.com

Client: sunbelt BUILDERS™
10841 HWY 9 CUMMING GA. 30014 770.888.0101 770.888.046

Project: R. L. COUSINS COMMUNITY CENTER
NEWTON CO. BOC RFP #24-04
8134 GEIGER STREET, N.W.
COVINGTON, GEORGIA

Issue Date:	Initial:	Drwg.	Revision Description:

Project No.: 202012
Drwg. Date: 06/28/24
Drwg. Revision:
Drawn By: B.D.G.
Checked By: E.M.S.
File Name: 2023012 A-5.2

Sheet Title: CONSTRUCTION DETAILS

Sheet No.: A-5.2

© BETA DESIGN GROUP, INC. 2024 This drawing may be utilized only for the purpose of constructing or installing the work shown thereon at the site of the work specified. Any other use of this drawing, including without limitation any reproduction or alteration of this drawing, without the prior written approval of Beta Design Group, Inc. is prohibited.

STRUCTURAL NOTES

GENERAL NOTES:

1. THESE NOTES SHALL APPLY EXCEPT WHERE OTHERWISE INDICATED BY DRAWINGS OR SPECIFICATIONS.
2. CONTRACT DOCUMENTS INCLUDE THE STRUCTURAL DRAWINGS AND SPECIFICATIONS BUT DO NOT INCLUDE SHOP DRAWINGS, VENDOR DRAWINGS OR OTHER SUBMITTALS BY THE CONTRACTOR.
3. REFERENCE TO DESIGN STANDARDS AND BUILDING CODES SHALL MEAN THE LATEST EDITION OF THE REFERENCE UNLESS SPECIFICALLY STATED OTHERWISE.
4. THE GENERAL CONTRACTOR SHALL VERIFY ALL DIMENSIONS AND SITE CONDITIONS AND NOTIFY ARCHITECT OF ANY DISCREPENCIES PRIOR TO PROCEEDING WITH WORK. FOR DIMENSIONS NOT SHOWN ON STRUCTURAL DRAWINGS, SEE ARCHITECTURAL DRAWINGS.
5. ALL MATERIALS & WORKMANSHIP ARE SUBJECT TO THE REVIEW OF THE ARCHITECT & ENGINEER OF RECORD.
6. STRUCTURAL DRAWINGS INDICATE TYPICAL AND CERTAIN SPECIFIC CONDITIONS ONLY. SHOP DRAWINGS SHALL DETAIL ALL CONDITIONS IN ACCORDANCE WITH SPECIFIED STANDARDS AND THE SPECIFIC REQUIREMENTS OF THIS PROJECT AS INDICATED ON THE DRAWINGS.
7. COORDINATE WITH OTHER DISCIPLINE DRAWINGS FOR DRIPS, CHAMFERS, REGLETS, RUSTICATIONS, SLOTS, SLEEVES, ANCHORS, AND INSERTS.
8. THE GENERAL CONTRACTOR SHALL COORDINATE ALL SIZES AND LOCATIONS OF ROOF PENETRATIONS WITH MECHANICAL AND ARCHITECTURAL DRAWINGS. PENETRATIONS GREATER THAN 12" ACROSS SHALL BE FRAMED AS SHOWN IN THE ROOF OPENING FRAMING DETAIL.
9. UNLESS SHOWN ON STRUCTURAL DRAWINGS, NO OPENINGS LARGER THAN 12" x 12" SHALL BE PLACED IN SLABS OR WALLS. FOR OPENINGS NOT SHOWN ON STRUCTURAL DRAWINGS, APPROVAL MUST BE OBTAINED FROM THE ARCHITECT PRIOR TO CONSTRUCTION OF OPENING.
10. THE CONTRACTOR HAS SOLE RESPONSIBILITY FOR THE MEANS, METHODS, TECHNIQUES, SEQUENCES, AND PROCEDURES OF CONSTRUCTION.
11. THE GENERAL CONTRACTOR HAS SOLE RESPONSIBILITY TO COMPLY WITH REQUIRED OSHA REGULATIONS.
12. THE STRUCTURE DESCRIBED BY THESE DRAWINGS IS SELF-SUPPORTING ONLY IN ITS COMPLETED FORM. THE CONTRACTOR SHALL BE RESPONSIBLE FOR THE DESIGN AND INSTALLATION OF TEMPORARY BRACING AND SHORING OF ALL WORK.
13. THE CONTRACTOR SHALL BE RESPONSIBLE FOR SUPPORTING AND MAINTAINING THE EXCAVATIONS REQUIRED FOR THE CONSTRUCTION SHOWN.
14. THE GENERAL CONTRACTOR SHALL COORDINATE WITH THE BUILDING OFFICIAL REGARDING SUBMITTAL OF INSPECTION REPORTS TO THE BUILDING DEPARTMENT.
15. DO NOT HANG OR ATTACH DUCTWORK, PIPING, LIGHTING, CONDUIT, EQUIPMENT, CEILINGS, ETC. FROM METAL DECKING.
16. REVIEW OF SUBMITTALS AND SHOP DRAWINGS BY THE ARCHITECT AND STRUCTURAL ENGINEER DOES NOT RELIEVE THE CONTRACTOR OF THE SOLE RESPONSIBILITY TO REVIEW AND CHECK ALL SUBMITTALS AND SHOP DRAWINGS BEFORE SUBMITTING TO THE STRUCTURAL ENGINEER. CONTRACTOR REMAINS SOLELY RESPONSIBLE FOR ERRORS AND OMISSIONS ASSOCIATED WITH THE PREPARATION OF SHOP DRAWINGS AS THEY PERTAIN TO MEMBER SIZES, DETAILS, AND DIMENSIONS SPECIFIED IN THE CONTRACT DOCUMENTS.
17. THE STRUCTURAL ENGINEER IS NOT RESPONSIBLE FOR THE DESIGN OF STEEL STAIRS, HANDRAILS, CURTAIN OR WINDOW WALL SYSTEMS, COLD-FORMED METAL FRAMING, OR OTHER SYSTEMS NOT SHOWN IN THE STRUCTURAL DOCUMENTS. SUCH SYSTEMS SHALL BE DESIGNED, FURNISHED AND INSTALLED AS REQUIRED BY OTHER PORTIONS OF THE CONTRACT DOCUMENTS.
18. CONSTRUCTION ADMINISTRATION AND SITE VISITS DURING CONSTRUCTION ARE NOT CURRENTLY INCLUDED IN OCONEE ENGINEERING'S SCOPE OF WORK FOR THIS PROJECT.

BUILDING DESIGN CRITERIA:

1. THESE STRUCTURAL DRAWINGS HAVE BEEN PREPARED IN ACCORDANCE WITH THE 2018 INTERNATIONAL BUILDING CODE (IBC) W/ GEORGIA STATE AMENDMENTS.
2. LIVE LOADS:
   - 2.A. ROOF LOAD (L_R) = 20 PSF (REDUCED PER IBC 1607.11.2)
   - 2.B. FLOOR LOAD (L_O) = N/A
3. DEAD LOADS:
   - 3.A. ROOF LOAD (D) = 20 PSF
   - 3.B. FLOOR LOAD (D) = N/A
4. SNOW LOADS:
   - GROUND SNOW LOAD (P_g) = 5.0 PSF
5. SEISMIC DESIGN CRITERIA:
   - 5.A. RISK CATEGORY = II
   - 5.B. SEISMIC IMPORTANCE FACTOR (I_E) = 1.00
   - 5.C. S_S = 0.2216 S_1 = 0.0837
   - 5.D. SITE CLASS = D
   - 5.E. S_{DS} = 0.236 S_{D1} = 0.134
   - 5.F. BASIC SEISMIC-FORCE-RESISTING SYSTEM (PER ASCE 7-16 TABLE 12.2-1 OR 12.14-1):
     - 5.F.1. STEEL SYSTEMS NOT SPECIFICALLY DETAILED FOR SEISMIC RESISTANCE
       - 5.F.1.a. RESPONSE MODIFICATION FACTOR (R) = 3.0
       - 5.F.1.b. SEISMIC RESPONSE COEFFICIENT (Cs) = 0.0788
       - 5.F.1.c. SEISMIC DESIGN CATEGORY = C
   - 5.G. DESIGN BASE SHEAR = 33.8 K "Y" DIRECTION (PERP. TO LONG AXIS)
   - = 27.1 K "X" DIRECTION (PERP TO SHORT AXIS)
   - 5.H ANALYSIS PROCEDURE USED = EQUIVALENT LATERAL FORCE
6. WIND LOADS:
   - BASIC WIND SPEED (V, 3 SEC GUST) = 110 MPH
   - OCCUPANCY CATEGORY = II
   - UPWIND EXPOSURE CATEGORY = B
   - INTERNAL PRESSURE COEFF. (GC_{PI}) = ±0.18
   - A = 6 FT.
   - COMPONENTS & CLADDING DESIGN PRESSURES (P_{GROSS} PER ASCE 7-16) (LOADS ARE UNREDUCED & UNFACTORED)
   - ROOF COMPONENTS & CLADDING DESIGN PRESSURES: (BASED ON 100 SF AREA)
   - ROOF: SEE ROOF UPLIFT DIAGRAM FOR UPLIFT LOADS
     - MAX DOWNWARD LOAD = 10 PSF
   - WALL COMPONENTS & CLADDING DESIGN PRESSURES: (BASED ON 20 SF AREA)
     - ZONE 4 = +20.4 PSF, -22.3 PSF ZONE 5 = +20.4 PSF, -26.7 PSF
7. PRE-ENGINEERED TRUSS DESIGN LOADS:
   - TOP CHORD:
     - DEAD LOAD = 10 PSF + TRUSS WEIGHT
     - LIVE LOAD = 20 PSF
   - BOT CHORD:
     - DEAD LOAD = 5 PSF + TRUSS WEIGHT
     - LIVE LOAD = 10 PSF (60 PSF @ MECHANICAL ACCESS LOCATIONS)
     - MECH LOAD = 200# CONCENTRATED LOAD @ ANY LOCATION ALONG BOT CHORD

FOUNDATION NOTES:

1. DESIGN SOIL BEARING PRESSURE = 2500 PSF. SOIL BEARING PRESSURE SHALL BE VERIFIED AT TIME OF EXCAVATION AND STRUCTURAL ENGINEER SHALL BE NOTIFIED IF THE ACTUAL SOIL BEARING PRESSURE IS LOWER THAN THE DESIGN SOIL PRESSURE.
2. ALL FOOTINGS SHALL BEAR ON ORIGINAL UNDISTURBED SOIL OR STRUCTURAL FILL AND HAVE A MINIMUM 12" OF COVER.
3. PRIOR TO POURING CONCRETE, ALL DEBRIS, WATER, AND LOOSE EARTH SHALL BE REMOVED FROM THE FOUNDATION BED.
4. COLUMN FOOTINGS AND WALL FOOTINGS SHALL BE POURED MONOLITHIC WITH ADJACENT FOOTINGS AT THE SAME ELEVATION.
5. GEOTECHNICAL ENGINEER SHALL VERIFY CONDITION AND/OR ADEQUACY OF ALL SUBGRADES, FILLS, AND BACKFILLS PRIOR TO PLACEMENT OF FOUNDATIONS, FOOTINGS, SLABS, WALLS, FILLS, BACKFILLS, ETC.
6. PLACEMENT AND COMPACTION OF STRUCTURAL FILL SHALL BE MONITORED BY THE GEOTECHNICAL ENGINEER. COMPACTION SHALL BE 95% OF STANDARD PROCTOR.
7. STEP FOOTINGS DOWN BELOW MECHANICAL, ELECTRICAL, OR PLUMBING LINES AS REQUIRED TO AVOID INTERFERENCE. SEE TYP FOOTING STEP DETAIL. COORDINATE W/ OTHER TRADES. PROVIDE PIPE SLEEVE TWO PIPE SIZES GREATER THAN THE PIPE PASSING THROUGH THE WALL. WHERE LINES PASS UNDER A FOOTING, PROVIDE RELIEVING ARCH FOR PROTECTION.
8. CONDUITS AND PIPES EMBEDDED IN SLABS SHALL NOT BE LARGER IN OUTSIDE DIMENSION THAN ⅓ THE OVERALL THICKNESS OF THE SLAB, THEY SHALL NOT BE SPACED CLOSER THAN THREE DIAMETERS OR WIDTHS ON CENTER, AND A MIN SLAB THICKNESS OF 3" MUST BE MAINTAINED OVER EMBEDDED ITEMS.
9. ALL DRAIN TILE SHALL BE 4" DIAMETER (MIN) PERFORATED PLASTIC PIPE WITH FABRIC SOCK AND 12" MINIMUM WASHED RIVER ROCK SURROUND. DO NOT USE CRUSHED OR FINE GRAVEL.
10. WHERE ANY UTILITY LINES PASS UNDER A FOOTING, PROVIDE A PRE-CAST CONCRETE RELIEVING ARCH, A MINIMUM OF THREE TIMES THE DIAMETER OF THE UTILITY PIPE FOR PROTECTION.

CONCRETE NOTES:

1. PREPARE DESIGN MIXTURES FOR EACH TYPE AND STRENGTH OF CONCRETE, PROPORTIONED ON THE BASIS OF LABORATORY TRIAL MIXTURE OR FIELD TEST DATA, OR BOTH, ACCORDING TO ACI 301.
2. MINIMUM CONCRETE COMPRESSIVE STRENGTH @ 28 DAYS:
   3000 PSI NORMAL WEIGHT CONCRETE (AS INDICATED ON DRAWINGS) WITH MAXIMUM WATER - CEMENTITIOUS MATERIALS RATIO OF 0.50 FOR 3000 PSI MIX. PROVIDE A MAXIMUM SLUMP OF 2" TO 4" BEFORE ADDING HIGH RANGE, WATER REDUCING ADMIXTURE OR PLASTICIZING ADMIXTURE.
3. FOR EXTERIOR CONCRETE, PROVIDE AIR ENTRAINMENT OF 5½% ± 1½% AT POINT OF DELIVERY FOR CONCRETE WITH 1½" NOMINAL MAXIMUM AGGREGATE SIZE. EXCEPTION: DO NOT ALLOW AIR CONTENT IN TROWELED, FINISHED FLOORS TO EXCEED 3%.
4. STRUCTURAL MEMBERS OF REINFORCED CONCRETE SHALL BE CONSTRUCTED IN ACCORDANCE WITH ACI 318-11.
5. SLAB ON GRADE CONTROL OR CONSTRUCTION JOINTS SHALL BE LOCATED AS INDICATED ON DRAWINGS SUCH THAT NO JOINT SPACING SHALL EXCEED 12'-0" O.C. FOR 4" SLABS & 15'-0" O.C. FOR 6" SLABS.THE LENGTH OF ANY PANEL SHALL NOT EXCEED TWO TIMES THE WIDTH OF THAT PANEL. JOINTS SHALL BE SAWED WITH POWER SAWS EQUIPPED WITH SHATTERPROOF ABRASIVE OR DIAMOND RIMMED BLADES. CUT JOINTS ⅛" WIDE TO ¼ OF THE SLAB DEPTH. JOINTS SHALL BE CUT AS SOON AS SAWING OPERATIONS WILL NOT TEAR, ABRADE, OR OTHERWISE DAMAGE THE SLAB SURFACE.
6. FLOOR SLAB CONSTRUCTION JOINTS MAY BE DOWELED OR FORMED WITH METAL KEYWAYS. ALL SLAB REINFORCING SHALL EXTEND THROUGH CONSTRUCTION JOINTS. SEE DETAILS.
7. EXTERIOR SLABS SHALL DRAIN FREELY AWAY FROM THE BUILDING. COORDINATE ELEVATIONS WITH CIVIL ENGINEER AND ARCHITECT.
8. REFER TO ARCHITECTURAL AND MECHANICAL DRAWINGS FOR SLAB FINISHES, SLOPES, AND DEPRESSIONS OF INTERIOR SLABS.
9. UNO, CHAMFER ALL EXPOSED CORNERS ¾".
10. VERTICAL, FULL HEIGHT , WEAKENED PLANE CONTRACTION JOINTS SHALL BE LOCATED AT 25'-0" MAXIMUM SPACING IN POURED CONCRETE WALLS. ALTERNATE LONGITUDINAL (HORIZONTAL) REINFORCING BARS SHALL BE STOPPED (JOINTED) AT CONTRACTION JOINTS. PROVIDE 1" WIDE, VERTICAL EXPANSION JOINTS AT 100'-0" MAXIMUM SPACING.
11. FULL HEIGHT CONSTRUCTION JOINTS BETWEEN SUCCESSIVE POURS SHALL BE KEYED (METAL KEYKOLD OR SIMILAR) IN POURED CONCRETE WALLS. A CONSTRUCTION JOINT MAY BE SUBSTITUTED FOR ANY CONTRACTION JOINT. EXTEND ALL HORIZONTAL REINFORCING THROUGH CONSTRUCTION JOINT UNLESS NOTED OTHERWISE.
12. ALL CONCRETE WALLS EXPOSED TO VIEW SHALL HAVE A SMOOTH FORMED FINISH. REPAIR AND PATCH TIE HOLES AND DEFECTS AND REMOVE FINS AND OTHER PROJECTIONS. WORKMANSHIP IS SUBJECT TO THE APPROVAL OF THE ARCHITECT OF RECORD. CONTRACTOR SHALL, AT NO COST TO THE OWNER, REMOVE AND REPLACE CONCRETE THAT CANNOT BE REPAIRED AND PATCHED TO ARCHITECT'S APPROVAL.
13. CONTRACTOR SHALL TO CONFORM TO ACI HOT OR COLD WEATHER PLACEMENT PROCEDURES IF APPLICABLE DUE TO TEMPERATURES AT TIME OF POUR.
14. SEE ARCHITECTURAL DRAWINGS FOR SLAB FINISHES AND CURING COMPOUNDS.
15. CONCRETE TESTING SHALL BE PERFORMED IN ACCORDANCE WITH THE REQUIREMENTS OF ACI 318-11. SAMPLES FOR STRENGTH TESTS OF EACH CLASS OF CONCRETE PLACED EACH DAY SHALL BE TAKEN NOT LESS THAN ONCE A DAY, NOR LESS THAN ONCE FOR EACH 50 CY OF CONCRETE USED FOR FOOTINGS, NOR LESS THAN ONCE FOR EACH 5000 SQUARE FEET OF SURFACE AREA FOR SLABS. TEST REPORTS INDICATING (NON)COMPLIANCE SHALL BE PROVIDED TO THE OWNER, ENGINEER & CONTRACTOR. A COPY OF THE TEST REPORTS SHALL BE AVAILABLE AT THE JOBSITE. 4 INCH DIAMETER x 8 INCH TEST CYLINDERS ARE ACCEPTABLE.

REINFORCING STEEL NOTES:

1. SHALL BE DETAILED, FABRICATED AND PLACED ACCORDING TO THE LATEST STANDARDS OF THE AMERICAN CONCRETE INSTITUTE (ACI) AND THE CONCRETE REINFORCING STEEL INSTITUTE (CRSI).
2. MATERIALS:
   - 2.A. REINFORCING BARS SHALL COMPLY WITH ASTM A615 GRADE 60.
   - 2.B. WELDED WIRE FABRIC SHALL COMPLY WITH ASTM A82 AND A185.
   - 2.C. REINFORCING BARS FOR WELDING SHALL COMPLY WITH ASTM A-706.
3. CLEAR MINIMUM COVER OF CONCRETE OVER REINFORCING BARS SHALL BE AS INDICATED ON THE DRAWINGS BUT SHALL NOT BE LESS THAN THE FOLLOWING:
   - 3.A. CONCRETE PLACED AGAINST EXPOSED EARTH (NOT FORMED) 3"
   - 3.B. FORMED SURFACES EXPOSED TO EARTH, LIQUIDS, OR WEATHER:
     - 3.B.1. SLABS & JOISTS W/ #5 BARS & SMALLER 1½"
     - 3.B.2. SLABS & JOISTS W/ #6 BARS & LARGER 2"
     - 3.B.3. BEAMS, PIERS, COLUMNS, WALLS, FOOTINGS, & BASE SLABS 2"
   - 3.C. FORMED SURFACES NOT EXPOSED TO EARTH, LIQUIDS, OR WEATHER:
     - 3.C.1. SLABS & JOISTS ¾"
     - 3.C.2. BEAMS, PIERS, & COLUMNS 1½"
     - 3.C.3. WALLS ¾"
     - 3.C.4. FOOTINGS & BASE SLABS 2"
4. ALL BARS DENOTED CONTINUOUS ON PLANS, SECTIONS AND DETAILS SHALL HAVE CLASS "B" TENSION SPLICE LAPS AND CORNER BARS AND HOOKS AT DISCONTINUOUS ENDS. SPLICED BARS SHALL BE SECURELY WIRED TOGETHER. SPLICES OF ADJACENT REINFORCING BARS SHALL BE STAGGERED 24" MIN WHEREVER POSSIBLE.
5. WELDED WIRE FABRIC, WHERE REQUIRED, SHALL BE PLACED IN THE CENTER OF THE SLAB UNLESS NOTED OTHERWISE. LAP JOINTS ONE WIRE SPACING PLUS 2" OR A MINIMUM OF 6". EXTEND FABRIC TO WITHIN 1" OF EDGES OF SLABS ON GRADE.
6. PROVIDE ADEQUATE BOLSTERS, HIGH CHAIRS, SUPPORT BARS, ETC. TO MAINTAIN SPECIFIED CLEARANCES FOR THE ENTIRE LENGTH OF ALL REINFORCING BARS AND WELDED WIRE FABRIC.
7. ALL CONCRETE WALLS TO BE DETAILED IN ELEVATION ON SHOP DRAWINGS. NO MORE THAN 50% OF HORIZONTAL WALL REINFORCING SHALL LAP IN A SINGLE VERTICAL PLANE.
8. REBAR FOR WELDED CONNECTIONS MUST MEET ASTM A706 WHICH ARE SPECIALLY FORMULATED TO BE WELDABLE. STANDARD ASTM A615 GRADE 60 REBARS ARE NOT ACCEPTABLE FOR WELDING. WELDING PROCEDURE SHALL CONFORM TO ANSI/AWS D1.4 "STRUCTURAL WELDING CODE - REINFORCING STEEL". DO NOT TACK WELD.
9. PROVIDE TWO #4 DIAGONAL BARS x 3'-0" LONG IN THE TOP FACE OF ALL SLABS AT ALL REENTRANT CORNERS, AT THE FLANGES OF PROJECTING POSTS & COLUMNS, AND AROUND FLOOR DRAINS. CENTER THE BARS ON THE CORNERS OR PROJECTIONS ABOVE THE SLABS.
10. INTERSECTING WALLS, IF POURED SEPARATELY, SHALL BE KEYED AND DOWELED TOGETHER W/ BARS OF THE SAME SIZE & SPACING AS HORIZ WALL REINFORCING.
11. TIE ALL REINFORCING & EMBEDMENTS SECURELY IN PLACE PRIOR TO PLACING CONCRETE. PROVIDE SUFFICIENT SUPPORTS TO MAINTAIN THE POSITION OF REINFORCEMENT WITHIN SPECIFIED TOLERANCES DURING ALL CONSTRUCTION ACTIVITIES. "STICKING" DOWELS INTO WET CONCRETE IS NOT PERMITTED.

CONC REINF LAP LENGTH
3000 PSI (ACI 318-11)

BAR SIZE	TENSION SPLICE
	CLASS 'B'
#3	22"
#4	29"
#5	36"
#6	43"
#7	63"
#8	72"

ALPHA BLDG SET 08-27-2024

OCONEE ENGINEERING L.L.C.
ATHENS, GA / LAKE OCONEE
STRUCTURAL ENGINEERING
P.O. Box 116 / 2610 Bowden Pond Road Greensboro, GA 30642
P: (770) 313-0302
e-mail: admin@oconeeengineering.com

R.L. COUSINS COMMUNITY CENTER
8134 GEIGER STREET, COVINGTON, GA
FOR: SUNBELT BUILDERS

MARK	DATE	BY	DESCRIPTION
	4-22-2024		ISSUE FOR PRICING

DESIGNED:
DRAWN:
CHECKED:
APPROVED:

OE PROJECT NO: OE24007
FILE NAME: OE24007-S-CORE
ORIGINAL DRAWING SIZE: 36"x24"
DATE: 4-22-2024

© COPYRIGHT 2024. UNAUTHORIZED USE OF ANY KIND, INCLUDING USE ON OTHER PROJECTS, IS PROHIBITED. ANY ALTERATIONS OR REPRODUCTIONS MUST BE AUTHORIZED IN WRITING BY OCONEE ENGINEERING, L.L.C.

STRUCTURAL SPECIFICATIONS

S-01
SHEET 1 OF 10

IMAGES
XREFS | OE24007-G-BS-OE-36x24.dwg | RL Cousins 2023012 baseplan phase two 022824
PRINTED BY: RALPH BOSWELL | DATE: Monday, April 22, 2024 3:18:25 AM | DRAWING FILE: C:\work\Oconee\acad\24\24007\OE24007-S-CORE.dwg | LAST MODIFIED: Monday, April 22, 2024 1:04:27 AM

STRUCTURAL NOTES (CONT.)

STRUCTURAL STEEL NOTES:

1. MATERIALS:
   - 1.A. STRUCTURAL W-SHAPES: ASTM A992, Fy = 50 KSI
   - 1.B. STRUCTURAL TUBING: ASTM A500, GRADE B, Fy = 46 KSI
   - 1.C. STRUCTURAL PIPE: ASTM A53, GRADE B, Fy = 35 KSI
   - 1.D. OTHER SHAPES & PLATES: ASTM A36, Fy = 36 KSI
   - 1.E. CONNECTION BOLTS: ASTM A325, UNO
   - 1.F. ANCHOR RODS: ASTM F1554, A307, OR A36, Fy = 36 KSI (2 NUTS & WASHERS W/ EACH)
   - 1.G. WELDING ELECTRODES: E70-XX, UNO.
2. STRUCTURAL STEEL DETAILING, FABRICATION, AND ERECTION SHALL BE IN ACCORDANCE WITH THE LATEST EDITION OF THE "MANUAL OF STEEL CONSTRUCTION" OF THE AISC.
3. BOLTED CONNECTIONS SHALL BE MADE USING $\frac{3}{4}$" DIAMETER BOLTS AND WASHERS CONFORMING TO ASTM A325 UNLESS OTHERWISE NOTED. THEY SHALL BE INSTALLED AND INSPECTED IN CONFORMANCE WITH THE "SPECIFICATIONS FOR STRUCTURAL JOINTS USING ASTM A325 OR A490 BOLTS". BOLTS SHALL BE TIGHTENED TO THE SNUG TIGHT CONDITION UNLESS OTHERWISE NOTED ON THE DRAWINGS. ALL HOLES TO BE DRILLED OR PUNCHED; FLAME CUT HOLES ARE NOT PERMITTED.
4. SHOP OR FIELD SPLICES BETWEEN SUPPORTS THAT ARE NOT REQUIRED BY DESIGN WILL NOT BE ALLOWED. ANY MEMBERS CONTAINING SUCH SPLICES SHALL BE REMOVED AND REPLACED WITH UNSPLICED MEMBERS AT THE FABRICATOR'S EXPENSE.
5. PROVIDE BOLTS AND PUNCH HOLES IN STRUCTURAL AND MISCELLANEOUS STEEL FOR ATTACHMENTS OR WOOD NAILERS AS REQUIRED ON THE ARCHITECTURAL, MECHANICAL AND STRUCTURAL DRAWINGS.
6. MINIMUM SIZE OF WELD IS $\frac{3}{16}$" UNLESS NOTED OTHERWISE. ALL WELDING SHALL CONFORM TO THE LATEST "STRUCTURAL WELDING CODE" BY THE AMERICAN WELDING SOCIETY. ALL WORK SHALL BE PERFORMED BY CERTIFIED WELDERS EXPERIENCED IN THE TYPE OF CONSTRUCTION INVOLVED. PROOF OF WELDER CERTIFICATION SHALL BE AVAILABLE AT THE JOB SITE.
7. SHOP DRAWINGS SHALL SHOW COMPLETE WELDING INFORMATION, BOTH SHOP AND FIELD, USING AMERICAN WELDING SOCIETY SYMBOLS UNLESS OTHERWISE INDICATED.
8. STEEL BEAMS SUPPORTED ON MASONRY OR CONCRETE WALLS SHALL HAVE A MIN OF 8" BEARING ON STEEL PLATE WITH ANCHORS.
9. PROVIDE 1$\frac{1}{2}$" NON-SHRINK GROUT UNDER ALL BASEPLATES.
10. ALL STEEL SHALL HAVE A PRIME COAT OF PAINT EXCEPT STEEL NOTED TO BE GALVANIZED.
11. ALL PORTIONS OF STEEL ENCASED IN CONCRETE OR IN CONTACT WITH EARTH SHALL BE PAINTED WITH BITUMINOUS PAINT.
12. STEEL FABRICATOR TO BE AN AISC CERTIFIED FABRICATOR.
13. ALL PLAN DIMENSIONS ARE TO CENTERLINE OF STEEL MEMBERS EXCEPT FOR STEEL CHANNELS. CHANNEL DIMENSIONS ARE TO THE BACK FACE OF THE WEB.

STEEL JOIST & GIRDER NOTES:

1. BAR JOISTS AND JOIST GIRDERS SHALL BE DESIGNED AND FABRICATED ACCORDING TO THE LATEST STANDARDS OF THE STEEL JOIST INSTITUTE. JOIST FABRICATOR SHALL BE A MEMBER OF THE STEEL JOIST INSTITUTE.
2. BAR JOISTS SHALL BE WELDED TO SUPPORTING BEAMS, JOIST GIRDERS OR WELD PLATES WITH 1" OF $\frac{3}{16}$" WELD AT EACH SIDE OF BAR JOIST UNLESS NOTED OTHERWISE.
3. PROVIDE JOIST BRIDGING TO MEET THE REQUIREMENTS OF SJI. PROVIDE UPLIFT BRIDGING FOR THE NET UPLIFT SHOWN IN THE DESIGN LOADING NOTES.
4. BRIDGING TERMINATING AT MASONRY WALLS OR STEEL BEAMS SHALL BE ANCHORED TO WALL OR BEAM.
5. BAR JOISTS AT COLUMN LOCATIONS TO BE BOLTED TO SUPPORTING BEAM, JOIST GIRDER, OR COLUMN AT TIME OF ERECTION.
6. MINIMUM BEARING REQUIREMENTS:
   - 6.A. BAR JOISTS:
     - 6.A.1. 2$\frac{1}{2}$" ON STRUCTURAL STEEL
     - 6.A.2. 4" ON STEEL BEARING PLATES IN MASONRY OR CONCRETE
   - 6.B. JOIST GIRDERS:
     - 6.B.1. 4" ON STRUCTURAL STEEL
     - 6.B.2. 6" ON STEEL BEARING PLATES IN MASONRY OR CONCRETE
7. UNLESS SHOWN ON STRUCTURAL DRAWINGS, NO PROVISIONS HAVE BEEN MADE IN THE BAR JOIST DESIGN TO ACCOUNT FOR CONCENTRATED LOADS. CONCENTRATED LOADS IN EXCESS OF 200 POUNDS WILL REQUIRE JOIST REINFORCING PER THE DETAILS. ROOF MOUNTED HVAC UNITS SHALL BE SUPPORTED AS SHOWN IN THE ROOF OPENING FRAMING DETAIL.

METAL DECK NOTES:

1. MATERIALS:
   - 1.A. ROOF DECK: 1$\frac{1}{2}$" DEEP, TYPE "B" (WIDE RIB), 22 GAGE, PAINTED, SHEET WIDTH = 36"

   METAL DECK MANUFACTURER SHALL BE A MEMBER OF THE STEEL DECK INSTITUTE (SDI). ALL PRODUCTS SHALL BE FACTORY MUTUAL APPROVED.
2. STEEL DECK SHALL BE CONTINUOUS OVER A MINIMUM OF 3 SUPPORTS.
3. DECK ATTACHMENT PATTERN SHALL BE AS INDICATED ON DRAWINGS.
4. PROVIDE 1 1/2" MINIMUM DECK BEARING AT ALL SUPPORTS. DECK SHALL BE PLACED AT THE PERIMETER WITH A COMPLETE RIB BEARING ON THE STEEL SUPPORT.

MASONRY NOTES:

1. MATERIALS, TESTING AND STORAGE OF MATERIALS SHALL CONFORM TO ACI-530 "SPECIFICATION FOR CONCRETE MASONRY STRUCTURES".
2. HOLLOW LOAD BEARING MASONRY UNITS:
   - 2.A. SHALL CONFORM TO ASTM C90
   - 2.B. WEIGHT: LIGHTWEIGHT
   - 2.C. MINIMUM COMPRESSIVE STRENGTH f'm = 1500 PSI ON NET AREA
   - 2.D. MORTAR SHALL CONFORM TO ASTM C270 CEMENT-LIME, TYPE S.
   - 2.E. MASONRY UNITS AND MORTAR SHALL INCLUDE INTEGRAL WATERPROOFING AGENT "DRYBLOCK" BY W.R. GRACE OR APPROVED EQUAL.
3. GROUT:
   - 3.A. SHALL CONFORM TO ASTM C476
   - 3.B. MAXIMUM AGGREGATE SIZE OF $\frac{3}{8}$"
   - 3.C. MINIMUM COMPRESSIVE STRENGTH OF 2500 PSI
   - 3.D. MAXIMUM SLUMP OF 9 INCHES
   - 3.E. MAXIMUM GROUT LIFT = 5'-0".
4. MASONRY REINFORCING (TYP, UNO):
   - 4.A. WALLS SHALL HAVE VERT #5 BARS @ 48"OC MAX AT IN CENTER OF CMU, UNO.
   - 4.B. ADDITIONAL VERT REINFORCING (COORDINATE W/ DETAILS):
     - 4.B.1. EACH SIDE OF OPENINGS
     - 4.B.2. WALL INTERSECTIONS
     - 4.B.3. ENDS OF WALLS
     - 4.B.4. EACH SIDE OF CONTROL JOINTS
     - 4.B.5. AS NOTED AND DETAILED ON DRAWINGS
   - 4.C. PROVIDE MATCHING DOWEL FOR VERT REINFORCING INTO FOUNDATION AND BOND BEAM AT ROOF
   - 4.D. PROVIDE BOND BEAMS:
     - 4.D.1. BOTTOM AND TOP OF OPENINGS
     - 4.D.2. JOIST & DECK BEARING (CONTINUOUS)
     - 4.D.3. TOP COURSE OF MASONRY WALLS
     - 4.D.4. AS NOTED AND DETAILED ON DRAWINGS
   - 4.E. HORIZ JOINT REINFORCING:
     - 4.E.1. SHALL BE HOT DIPPED GALVANIZED 9 GAGE WIRE TRUSS OR LADDER TYPE
     - 4.E.2. SPACED AT 16" ON CENTER (UNO)
     - 4.E.3. MINIMUM STRAIGHT LAP = 16"
     - 4.E.4. MINIMUM CORNER OR TEE LAP = 30"
     - 4.E.5. SHALL BE FULLY EMBEDDED IN MORTAR WITH MINIMUM COVER 5/8" FROM FACE OF MORTAR
     - 4.E.6. DISCONTINUE HORIZ REINFORCING AT CONTROL JOINTS
5. MASONRY SHALL BE LAID IN RUNNING BOND UNLESS OTHERWISE NOTED.
6. ALL BARS DENOTED CONTINUOUS ON PLANS, SECTIONS AND DETAILS SHALL HAVE LAP SPLICES, CORNER BARS AND HOOKS AT DISCONTINUOUS ENDS. SEE MASONRY SPLICE LAP TABLE FOR MINIMUM MASONRY LAP SPLICE LENGTHS.
7. AT FIRST COURSE OF MASONRY, PROVIDE FULL MORTAR BED EQUAL TO WALL THICKNESS EXCEPT AT CELLS TO BE GROUTED SOLID.
8. UNITS TO RECEIVE VERT REINFORCING SHALL HAVE CELLS ALIGNED VERTICALLY FOR FULL HEIGHT OF REINFORCEMENT.
9. FILL ALL MASONRY CELLS BELOW FINISHED FLOOR WITH GROUT. WHERE FINISHED FLOOR IS BELOW GRADE, FILL ALL CELLS BELOW GRADE.
10. ALL ANCHOR BOLTS INTO MASONRY SHALL BE PLACED IN FULLY GROUTED CELLS. MIN EMBEDMENT = 4$\frac{1}{4}$".
11. PIPES OR CONDUITS MAY PENETRATE HORIZONTALLY THROUGH MASONRY WALLS BY MEANS OF A SCHEDULE 40 GALVANIZED STEEL SLEEVE SOLIDLY GROUTED IN PLACE. SLEEVE SIZE SHALL BE TWO PIPE SIZES GREATER THAN THE PIPE PASSING THROUGH THE WALL. CENTER TO CENTER SLEEVE SPACING SHALL NOT BE LESS THAN 3 SLEEVE DIAMETERS.
12. AFTER MORTAR IS THOROUGHLY SET AND CURED, CLEAN MASONRY COMPLETELY USING THE LEAST HARSH METHOD POSSIBLE.
13. UNO, PROVIDE VERT CONTROL JOINTS MEETING THE FOLLOWING CRITERIA (REFER TO ARCH DRAWINGS FOR LOCATIONS):
   - 13.A. LOCATED 28'-0" OC MAX
   - 13.B. MAX 8'-0" FROM BUILDING CORNERS
   - 13.C. NO CLOSER THAN 2'-0" TO OPENING EDGES
   - 13.D. NO CLOSER THAN 1'-4" TO MAJOR BEAM OR JOIST BEARINGS

CMU REINF LAP LENGTH
Fy=60 KSI, f'm=1500 PSI

BAR SIZE	SPLICE LENGTH
#3	19"
#4	25"
#5	31"
#6	57"
#7	70"
#8	98"

METAL STUD FRAMING NOTES:

1. METAL STUD MANUFACTURER SHALL BE A MEMBER OF THE STEEL STUD MANUFACTURERS ASSOCIATION (SSMA).
2. METAL STUD STRENGTH CRITERIA:
   - 2.1. GAGES 25 THROUGH 18 - 33 ksi MIN YIELD STRESS
   - 2.2. GAGES 16 THROUGH 12 - 50 ksi MIN YIELD STRESS
   - 2.3. RUNNER TRACK - 33 ksi MIN. YIELD STRESS
3. METAL STUD MEMBER DESIGNATION: 600 S 137 - 33

   WEB DEPTH: 600 = 6"
   MEMBER TYPE: S = STUD, T =TRACK, U = CHANNEL, F = FURRING
   FLANGE WIDTH: 137 = 1.37" (1 $\frac{3}{8}$")
   MIN. THICKNESS IN MILS.

MILS	GA
18	25
27	22
33	20
43	18
54	16
68	14
97	12
118	10

4. METAL STUDS AND ACCESSORIES SHALL HAVE A G60 GALVANIZED COATING UNLESS NOTED OTHERWISE
5. FASTENERS:
   - 5.1. SCREW CONNECTIONS
     - 5.1.1. FASTENING STUD TO STUD - USE #10-16 TRAXX/3 x 5/8" LONG BY BUILDEX OR APPROVED EQUAL UNLESS OTHERWISE NOTED.
     - 5.1.2. FASTENING STUD TO MASONRY - USE $\frac{1}{4}$"ø TAPCON SCREWS BY ITW BUILDEX OR APPROVED EQUAL
       - 5.1.2.1. MIN EMBEDMENT = 1"
       - 5.1.2.2. MIN EDGE DISTANCE = 2"
       - 5.1.2.3. MIN SPACING BETWEEN FASTENERS = 3"
   - 5.2. POWDER DRIVEN FASTENERS (PDF):
     - 5.2.1. FASTENING TO CONCRETE or MASONRY - USE 0.145"ø DOME HEAD NAIL TYPE "X-ZF" BY HITLI OR APPROVED EQUAL OR UNLESS NOTED OTHERWISE.
       - 5.2.1.1. MIN EMBEDMENT = 1$\frac{1}{4}$"
       - 5.2.1.2. MIN EDGE DISTANCE = 2"
       - 5.2.1.3. MIN SPACING BETWEEN FASTENERS = 3"
     - 5.2.2. FASTENING TO STEEL - USE 0.145"ø DOME HEAD KNURLED SHANK FASTENER TYPE "X-EDNI" BY HILTI OR APPROVED EQUAL UNLESS NOTED OTHERWISE.
       - 5.2.2.1. MIN EMBEDMENT = FULL PENETRATION
       - 5.2.2.2. MIN EDGE DISTANCE = $\frac{1}{2}$"
       - 5.2.2.3. MIN SPACING BETWEEN FASTENERS = 1"
6. FASTENING - MINIMUM FASTENING REQUIREMENTS, UNLESS NOTED OTHERWISE
   - 6.1. TRACK TO CONCRETE - HILTI SDF PINS OR EQUAL AT 8" OC
   - 6.2. TRACK TO STRUCTURAL STEEL - HILTI ESD PINS OR EQUAL AT 12" OC
   - 6.3. TRACK TO STUD AND STUD TO STUD - BUILDEX #10-16 TRAXX OR EQUAL PER MANUFACTURER'S RECOMMENDATION. (3 SCREWS MINIMUM)
   - 6.4. STUD TO STEEL OR CONCRETE - USE POWDER DRIVEN FASTENERS REFERENCED ABOVE. SEE DETAILS FOR CONNECTIONS (MINIMUM 2 FASTENERS)
7. LOADBEARING WALLS
   - 7.1. STUDS SHALL BE FULLY SEATED IN THE BOTTOM TRACK WITH A MAXIMUM $\frac{1}{16}$" GAP IN THE PRE-LOADED CONDITION.
   - 7.2. CONTRACTOR SHALL ALIGN VERTICAL STUDS IN LOADBEARING WALLS WITH THE FLOOR JOISTS ABOVE.
   - 7.3. LOADBEARING WALL STUDS SHALL BE BRACED BY ONE OF THE FOLLOWING METHODS:
     - 7.3.1. COLD ROLLED CHANNEL - RUN HORIZONTALLY THROUGH STUD PUNCHOUTS AND ATTACHED AT EACH STUD.
     - 7.3.2. 2" WIDE 18 GAGE STEEL STRAPS - RUN HORIZONTALLY, ON BOTH SIDES OF THE STUDS, AND ATTACHED AT EACH STUD.
   - 7.4. VERTICAL SPACING OF THE BRACING IS LIMITED TO A MAXIMUM OF 4'-0" THROUGHOUT THE HEIGHT OF THE WALL.
8. JOISTS SHALL BE FABRICATED TO PROVIDE 12" OF UNPUNCHED WEB AT BEARING ENDS.
9. PROVIDE JOIST WEB STIFFENERS PER METAL STUD MANUFACTURERS' RECOMMENDATIONS AT BEARING POINTS.
10. PROVIDE END BLOCKING WHERE JOISTS ARE NOT RESTRAINED AGAINST ROTATION.
11. CURTAINWALL and NON-LOADBEARING PARTITIONS
    - 11.1. MECHANICAL BRACING OF STUDS IS NOT NECESSARY WHERE WALL SHEATHING IS ATTACHED ON BOTH SIDES OF THE STUDS.
    - 11.2. WHEN ONLY ONE FACE OF THE STUDS RECEIVE SHEATHING, PROVIDE BRACING BY ONE OF THE FOLLOWING METHODS:
      - 11.2.1. COLD ROLLED CHANNEL - RUN HORIZONTALLY THROUGH STUD PUNCHOUTS AND ATTACHED AT EACH STUD
      - 11.2.2. 2" WIDE 18 GAGE STEEL STRAPS - RUN HORIZONTALLY, ON BOTH SIDES OF THE STUDS, AND ATTACHED AT EACH STUD.
    - 11.3. VERTICAL SPACING OF THE BRACING IS LIMITED TO A MAX OF 4'-0" FOR THE HEIGHT OF THE WALL.
12. PROVIDE ALL ACCESSORIES AS REQUIRED BY THE METAL STUD MANUFACTURER .

SHOP DRAWING NOTES:

1. CONTRACTOR SHALL FURNISH COMPLETE AND DETAILED SHOP DRAWINGS FOR THE FOLLOWING:
   - 1.A. STRUCTURAL STEEL
   - 1.B. MISCELLANEOUS METAL
   - 1.C. STEEL JOISTS, GIRDERS, AND METAL DECK
   - 1.D. CONCRETE MIX DESIGN
   - 1.E. LIGHT GAUGE METAL ROOF TRUSSES
   - 1.F. PRE-ENGINEERED AWNINGS / CANOPIES
2. SHOP DRAWINGS SHOULD BE TRANSMITTED ELECTRONICALLY. ENGINEER WILL REVIEW & RETURN SHOP DRAWINGS WITH COMMENTS WITHIN 10 WORKING DAYS FROM TIME OF RECEIPT.
3. UNLESS NOTED, SUBMIT SHOP DRAWINGS FOR ALL FABRICATED MATERIALS. DESIGN DRAWINGS SHALL NOT BE REPRODUCED FOR USE AS SHOP DRAWINGS. SHOP DRAWINGS WILL NOT BE REVIEWED UNLESS THEY ARE STAMPED "APPROVED" BY THE GENERAL CONTRACTOR.
4. SHOP DRAWINGS FOR TRUSSES AND OTHER ITEMS DESIGNATED AS "DESIGNED BY OTHERS" OR "PRE-ENGINEERED" SHALL BE SEALED BY THE COMPONENT DESIGN ENGINEER OF RECORD PRIOR TO SUBMITTAL FOR REVIEW. ALL PRE-ENGINEERED TRUSS SHOP DRAWINGS SHALL BE AVAILABLE ON THE JOB SITE DURING THE TIMES OF INSPECTION AND SHALL BEAR CLEAR INDICATION THAT THEY HAVE BEEN REVIEWED AND APPROVED BY THE PROJECT STRUCTURAL ENGINEER OF RECORD.
5. THE CONTRACTOR SHALL HAVE AN APPROVED SET OF ALL SHOP DRAWINGS AND PROOF OF WELDER CERTIFICATION AT THE JOBSITE AT ALL TIMES.

PRESSURE TREATED LUMBER NOTE:

1. ALL FASTENERS USED WITH PRESSURE TREATED LUMBER SHALL BE HOT-DIPPED GALVANIZED OR STAINLESS STEEL. ALL SIMPSON CONNECTORS USED WITH PRESSURE TREATED LUMBER SHALL BE "ZMAX" COATED AS A MINIMUM.

ABBREVIATIONS

A.B.	ANCHOR BOLT	MAS.	MASONRY
AFF	ABOVE FINISHED FLOOR	MAX	MAXIMUM
ARCH	ARCHITECT	MFR.	MANUFACTURER
B/	BOTTOM OF	MIN.	MINIMUM
BM.	BEAM	MISC.	MISCELLANEOUS
BOTT	BOTTOM	M.O.	MASONRY OPENING
BLKG.	BLOCKING	MTL.	METAL
BLDG.	BUILDING	N.A.	NOT APPLICABLE
CJ	CONTROL/CONSTRUCTION JOINT	N/A	NOT APPLICABLE
C.L.	CENTER LINE	N.I.C.	NOT IN CONTRACT
CLR	CLEAR	N.T.S.	NOT TO SCALE
CMU	CONCRETE MASONRY UNIT	O.C.	ON CENTER
COL	COLUMN	O.D.	OUTSIDE DIAMETER
CONC	CONCRETE	O.H.	OPPOSITE HAND
CONT	CONTINUOUS	OPNG	OPENING
CONST	CONSTRUCTION	OPP.	OPPOSITE
CONTR.	CONTRACTOR	PDF	POWER DRIVEN FASTENER
COORD	COORDINATE	PJF	PREMOLDED JOINT FILLER
CTR.	CENTER	PL	PLATE
DET.	DETAIL	PLYWD.	PLYWOOD
DIA	DIAMETER	PREFAB.	PREFABRICATED
DN	DOWN	P.T.	PRESSURE TREATED
DIM.	DIMENSION	PTD.	PAINTED
DWG.	DRAWING	RAD.	RADIUS
EA.	EACH	REINF	REINFORCING
E.J.	EXPANSION JOINT	REQ'D	REQUIRED
EL	ELEVATION	SECT.	SECTION
ELEV	ELEVATION	SHT.	SHEET
E.W.	EACH WAY	SIM.	SIMILAR
EXIST.	EXISTING	SPCS	SPACES
F.F.	FINISH FLOOR	SQ.	SQUARE
FIN. FLR.	FINISH FLOOR	STD.	STANDARD
FT.	FOOT	STL	STEEL
FTG	FOOTING	STRUC.	STRUCTURAL
F.V.	FIELD VERIFY	S.W.	SHORT WAY
GA.	GAUGE	T/	TOP OF
GALV.	GALVANIZED	THK.	THICK
G.C.	GENERAL CONTRACTOR	TYP	TYPICAL
GDR	GIRDER	U.N.O.	UNLESS NOTED OTHERWISE
HT.	HEIGHT	VERT.	VERTICAL
HORIZ	HORIZONTAL	WD	WOOD
JST	JOIST	WF	WIDE FLANGE
JT	JOINT	WWF	WELDED WIRE FABRIC
KB	KNEE BRACE	WWM	WELDED WIRE MESH
LG	LONG	W/	WITH
LLH	LONG LEG HORIZONTAL	W/O	WITHOUT
LLV	LONG LEG VERTICAL	WP	WORK POINT
LW	LONG WAY		

ALPHA BLDG SET 08-27-2024

OCONEE ENGINEERING L.L.C.
STRUCTURAL ENGINEERING
ATHENS, GA / LAKE OCONEE
P: (770) 313-0302
e-mail: admin@oconeeengineering.com
P.O. Box 116 /
2610 Bowden Pond Road
Greensboro, GA 30642

R.L. COUSINS COMMUNITY CENTER
8134 GEIGER STREET, COVINGTION, GA
FOR: SUNBELT BUILDERS

MARK	DATE	BY	DESCRIPTION
	4-22-2024		ISSUE FOR PRICING

DESIGNED:
DRAWN:
CHECKED:
APPROVED:

OE PROJECT NO: OE24007
FILE NAME: OE24007-S-CORE
ORIGINAL DRAWING SIZE: 36"x24"
DATE: 4-22-2024

© COPYRIGHT 2024. UNAUTHORIZED USE OF ANY KIND, INCLUDING USE ON OTHER PROJECTS, IS PROHIBITED. ANY ALTERATIONS OR REPRODUCTIONS MUST BE AUTHORIZED IN WRITING BY OCONEE ENGINEERING, L.L.C.

STRUCTURAL SPECIFICATIONS

IMAGES
XREFS | OE24007-G-BS-OE-36x24.dwg | RL Cousins 20230012 baseplan phase two 022824
PRINTED BY: RALPH BOSWELL | DATE: Monday, April 22, 2024 3:18:28 AM | DRAWING FILE: C:\work\Oconee\acad\24\24007\OE24007-S-CORE.dwg | LAST MODIFIED: Monday, April 22, 2024 1:04:27 AM

SCHEDULE OF SPECIAL INSPECTION SERVICES

MATERIAL / ACTIVITY	SERVICE	Y/N	EXTENT	AGENT*	DATE COMPLETED
		APPLICABLE TO THIS PROJECT			
1704.2.5 Inspection of Fabricators					
Verify fabrication/quality control procedures. (May be waived by building official.)	In-plant review	Y	Periodic		
1705.2 Steel Construction					
Material verification of high-strength bolts, nuts, and washers.	Review material markings and certificates of compliance	Y	Periodic		
Inspection of high-strength bolting:	Field inspection				
a. Bearing-type connections		Y	Periodic		
b. Pre-tensioned or slip-critical					
1) Turn-of-nut with matching markings		Y	Periodic		
2) Direct tension indicator		Y	Periodic		
3) Twist-off bolt		Y	Periodic		
4) Turn-of-nut without matching markings		Y	Continuous		
5) Calibrated wrench		Y	Continuous		
Material verification of structural steel:					
a. Identification markings	Field inspection	Y	Periodic		
b. Certified mill tests	Review submittals	Y	Each submittal		
Weld filler materials.	Review certificate of compliance and field verification	Y	Periodic and each submittal		
Structural steel welding:	Shop and field inspection				
a. Complete and partial penetration groove welds		Y	Continuous		
b. Multi-pass fillet welds		Y	Continuous		
c. Single-pass fillet welds > 5/16"		Y	Continuous		
d. Single-pass fillet welds < 5/16"		Y	Periodic		
e. Floor and deck welds		Y	Periodic		
Reinforcing steel welding:	Shop and field inspection				
a. Verification of weldability of steel other than ASTM A 706		Y	Periodic		
b. Reinforcing steel-resisting flexural and axial forces in intermediate and special moment frames, and boundary elements of special concrete shear walls, and shear reinforcement		N	Continuous		
c. Shear reinforcement		Y	Continuous		
d. Other reinforcing steel		Y	Periodic		
Inspection of steel frame joint details for compliance with approved construction documents.	Field inspection				
a. Details such as bracing & stiffening		Y	Periodic		
b. Member locations		Y	Periodic		
c. Application of joint details at each connection		Y	Periodic		
1705.3 Concrete Construction					
Inspection of reinforcing steel installation.	Field inspection	Y	Periodic.		
Inspection of prestressing steel installation.	In-plant or field review	N	Periodic		
Inspection of prestressed concrete:	In-plant or field review				
a. Application of prestressing force		N	Continuous		
b. Grouting of bonded prestressing tendons in the seismic-force-resisting system		N	Continuous		
Inspection of cast-in-place bolts prior to and during placement of concrete where allowable loads have been increased per IBC section 1908.4.	Field inspection	Y	Continuous		
Verification of required design mix.	Review submittals	Y	Periodic		
Fresh concrete sampling.	Field testing	Y	Continuous		
Inspection of concrete and shotcrete placement for proper application techniques	Field review	Y	Continuous		
Concrete curing operations.	Field review	Y	Periodic		
Erection of precast concrete members.	Field review	N	Periodic		
Evaluation of concrete strength.	Field testing and review of laboratory reports	Y	Periodic		
Verification of in-situ concrete strength, prior to stressing of tendons in post tensioned concrete and prior to removal of shores and forms from beams and structural slabs.	Review field testing and laboratory reports	N	Periodic		
Inspection of formwork for shape, lines, location and dimensions	Field inspection	Y	Periodic		
1705.4 Masonry Construction					
Verify proportions of site prepared mortar, grout and prestressing grout for bonded tendons.	Field and submittal review	Y	Periodic		
Verify construction of mortar joints.	Field inspection	Y	Periodic		
Verify location of reinforcement and connectors, and placement of prestressing tendons and anchorages.	Field inspection	Y	Periodic		
Verify prestressing technique	Field inspection	N	Periodic		
Verify size and location of structural masonry elements.	Field and submittal review	Y	Periodic		

SCHEDULE OF SPECIAL INSPECTION SERVICES

MATERIAL / ACTIVITY	SERVICE	Y/N	EXTENT	AGENT*	DATE COMPLETED
		APPLICABLE TO THIS PROJECT			
Verify type, size, and location of anchors, including details of anchorage of masonry to structural members, frames, or other construction.	Field inspection	Y	Level 1 - Periodic Level 2 - Continuous		
Verify size, grade, and type of reinforcement.	Field inspection	Y	Periodic		
Verify welding of reinforcing bars.	Field inspection	Y	Continuous		
Verify protection of masonry during hot/cold weather.	Field inspection	Y	Periodic		
Verify grout space is clean prior to grouting.	Field inspection	Y	Continuous		
Verify grout placement complies with code and construction document provisions.	Field inspection	Y	Continuous		
Observe preparation of grout specimens, mortar specimens, and/or prisms.	Field inspection	Y	Continuous		
Verify compliance with required testing provisions of construction documents and the approved submittals.	Field inspection	Y	Periodic		
Verify grade and size of prestressing tendons and anchorages.	Field inspection	N	Periodic		
Verify proper grouting of prestressing tendons.	Field inspection	N	Continuous		
Verify application and measurement of prestressing force	Field inspection	N	Continuous		
1705.6 Soils					
Verify materials below shallow foundations are adequate to achieve the design bearing capacity.	Field inspection	Y	Periodic		
Verify excavations are extended to proper depth and have reached proper material.	Field inspection	Y	Periodic		
Perform classification and testing of controlled fill materials.	Field inspection	Y	Periodic		
Verify site preparation complies with approved soils report.	Field inspection	Y	Continuous		
Verify use of proper materials, densities, and lift thicknesses during placement and compaction of controlled fill	Field inspection	Y	Continuous		
Prior to placement of controlled fill, observe subgrade and verify that site has been prepared properly	Field inspection	Y	Periodic		
Verify dry-density of compacted fill complies with approved soils report.	Review field testing	Y	Periodic		

*** INSPECTION AGENTS**

FIRM	ADDRESS	TELEPHONE NO.
1.		
2.		
3.		

Notes:

1. The inspection and testing agent(s) shall be engaged by the Owner or the Owner's Agent, and not by the Contractor or Subcontractor whose work is to be inspected or tested. Any conflict of interest must be disclosed to the Building Official prior to commencing work. The qualifications of the Special Inspector(s) and/or testing agencies may be subject to the approval of the Building Official and/or the Design Professional.

2. The list of Special Inspectors may be submitted as a separate document, if noted so above.

3. Items left blank are not in the scope of this design professional & should be determined by other design professionals associated with the project.

Encircle "Yes" or "No" as appropriate below:

Are Requirements for Seismic Resistance included in the Statement of Special Inspections?	Yes (No)
Are Requirements for Wind Resistance included in the Statement of Special Inspections?	Yes (No)

ALPHA BLDG SET 08-27-2024

DEFINITIONS REGARDING SPECIAL INSPECTIONS

AGENTS OF THE SPECIAL INSPECTOR (AGENTS) - QUALIFIED INDIVIDUALS OR FIRMS WORKING UNDER THE DIRECTION OF THE SPECIAL INSPECTOR WHO ARE PROVIDING THE INSPECTIONS AND TESTS NECESSARY TO COMPLETE THE SPECIAL INSPECTION PROCESS.

APPROVED FABRICATOR - A FABRICATOR REGISTERED AND APPROVED BY THE BUILDING OFFICIAL AND ENGINEER OF RECORD, TO PERFORM WORK OFF SITE WITHOUT SPECIAL INSPECTION. THE APPROVAL IS BASED UPON REVIEW OF THE FABRICATOR'S WRITTEN PROCEDURAL AND QUALITY CONTROL MANUAL AND PERIODIC AUDITING OF FABRICATIONS PRACTICES BY AN APPROVED SPECIAL INSPECTION AGENCY.
1. IF AN APPROVED FABRICATOR IS NOT USED, THEN THE SHOP FABRICATION OF STRUCTURAL MEMBERS AND ASSEMBLIES SHALL REQUIRE SPECIAL INSPECTION OF THE SHOP QUALITY CONTROL PROCEDURES PER SECTION 1704 OF THE IBC. FABRICATION EXAMPLES INCLUDE SHOP WELDING AND BOLTING AND THE ASSEMBLY OF PRE-ENGINEERED TRUSSES.

BUILDING OFFICIAL - THE OFFICER OR OTHER DESIGNATED AUTHORITY CHARGED WITH THE ADMINISTRATION AND ENFORCEMENT OF THE BUILDING CODE OR A DULY AUTHORIZED REPRESENTATIVE WHO HAS THE LEGAL AUTHORITY TO SEE THAT ALL OF THE PROVISIONS OF THE SPECIAL INSPECTION PROCESS ARE CARRIED OUT.

FABRICATED ITEM - STRUCTURAL LOAD-BEARING OR LATERAL LOAD RESISTING ASSEMBLIES CONSISTING OF MATERIALS ASSEMBLED PRIOR TO INSTALLATION IN A BUILDING OR STRUCTURE, OR SUBJECTED TO OPERATIONS SUCH AS HEAT TREATMENT, THERMAL CUTTING, COLD WORKING OR REFORMING AFTER MANUFACTURE AND PRIOR TO INSTALLATION IN A BUILDING OR STRUCTURE. MATERIALS PRODUCED IN ACCORDANCE WITH STANDARD SPECIFICATIONS REFERENCED BY THE IBC, SUCH AS ROLLED STRUCTURAL STEEL SHAPES, STEEL REINFORCING BARS, MASONRY UNITS AND PLYWOOD SHEETS, SHALL NOT BE CONSIDERED "FABRICATED ITEMS".

FINAL REPORT OF SPECIAL INSPECTIONS - A REPORT SUBMITTED TO THE BUILDING OFFICIAL AFTER CONSTRUCTION IS COMPLETE WHICH INCLUDES A STATEMENT THAT THE INSPECTIONS INCLUDED IN THE STATEMENT OF SPECIAL INSPECTIONS HAVE BEEN COMPLETED, AND A LISTING OF UNRESOLVED DISCREPANCIES. THIS REPORT IS SIGNED BY THE SPECIAL INSPECTOR.

SPECIAL INSPECTIONS - BUILDING CODE REQUIRED INSPECTIONS AND TESTS OF THE MATERIALS, FABRICATION, INSTALLATION OF ITEMS REQUIRING SPECIAL EXPERTISE TO ENSURE COMPLIANCE WITH APPROVED CONTRACT DOCUMENTS AND REFERENCED STANDARDS.

SPECIAL INSPECTION AGENCY - THE ACCREDITED INSPECTION COMPANIES APPROVED BY THE BUILDING OFFICIAL AND THE ENGINEER OF RECORD TO PERFORM SPECIAL INSPECTION AS REQUIRED BY THE BUILDING CODE AND THE PROJECT SPECIFICATIONS AND AS DESCRIBED IN SECTION 1704 OF THE 2018 INTERNATIONAL BUILDING CODE.

SPECIAL INSPECTOR (SI) - THE INDIVIDUAL OR FIRM RESPONSIBLE FOR COORDINATION OF THE SPECIAL INSPECTION PROGRAM AND TO WHOM ALL INSPECTION AND TESTING REPORTS ARE SENT.

STATEMENT OF SPECIAL INSPECTIONS - A DOCUMENT THAT OULINES THE SPECIAL INSPECTION REQUIREMENTS FOR THE PROJECT BEING PERMITTED. THE STATEMENT OF SPECIAL INSPECTIONS SHOULD BE FILED WITH THE BUILDING OFFICIAL PRIOR TO THE ISSUANCE OF A BUILDING PERMIT.

ENGINEER OF RECORD (EOR) - THE STRUCTURAL ENGINEER WHO IS LEGALLY RESPONSIBLE FOR THE DESIGN OF THE PRIMARY STRUCTURAL SYSTEM.

TESTING AGENCY - AN APPROVED INDEPENDENT TESTING AGENCY ACCEPTABLE TO THE BUILDING OFFICIAL WHOSE ACTIVITIES ARE COORDINATED BY THE SPECIAL INSPECTOR.

CONTINUOUS SPECIAL INSPECTION: THE FULL-TIME OBSERVATION OF WORK REQUIRING SPECIAL INSPECTION BY AN APPROVED SPECIAL INSPECTOR WHO IS PRESENT IN THE AREA WHERE THE WORK IS BEING PERFORMED.

PERIODIC SPECIAL INSPECTION - THE PART-TIME OR INTERMITTENT OBSERVATION OF WORK REQUIRING SPECIAL INSPECTION BY AN APPROVED SPECIAL INSPECTOR WHO IS PRESENT IN THE AREA WHERE THE WORK HAS BEEN OR IS BEING PERFORMED AND AT THE COMPLETION OF THE WORK.

OCONEE ENGINEERING L.L.C.
STRUCTURAL ENGINEERING
ATHENS, GA / LAKE OCONEE
P: (770) 313-0302
e-mail: admin@oconeeengineering.com
P.O. Box 116 /
2610 Bowden Pond Road
Greensboro, GA 30642

R.L. COUSINS COMMUNITY CENTER
8134 GEIGER STREET, COVINGTION, GA
FOR: SUNBELT BUILDERS

MARK	DATE	BY	DESCRIPTION
	4-22-2024		ISSUE FOR PRICING

OE PROJECT NO: OE24007
FILE NAME: OE24007-S-CORE
ORIGINAL DRAWING SIZE: 36"x24"
DATE: 4-22-2024

DESIGNED:
DRAWN:
CHECKED:
APPROVED:

© COPYRIGHT 2024. UNAUTHORIZED USE OF ANY KIND, INCLUDING USE ON OTHER PROJECTS, IS PROHIBITED. ANY ALTERATIONS OR REPRODUCTIONS MUST BE AUTHORIZED IN WRITING BY OCONEE ENGINEERING, L.L.C.

SPECIAL INSPECTIONS

S-0.3
SHEET 3 OF 10

IMAGES
XREFS | OE24007-G-BS-OE-36x24.dwg | RL Cousins 2023012 baseplan phase two 022824
PRINTED BY: RALPH BOSWELL | DATE: Monday, April 22, 2024 3:18:31 AM | DRAWING FILE: C:\work\Oconee\acad\24\24007\OE24007-S-CORE.dwg | LAST MODIFIED: Monday, April 22, 2024 1:04:27 AM

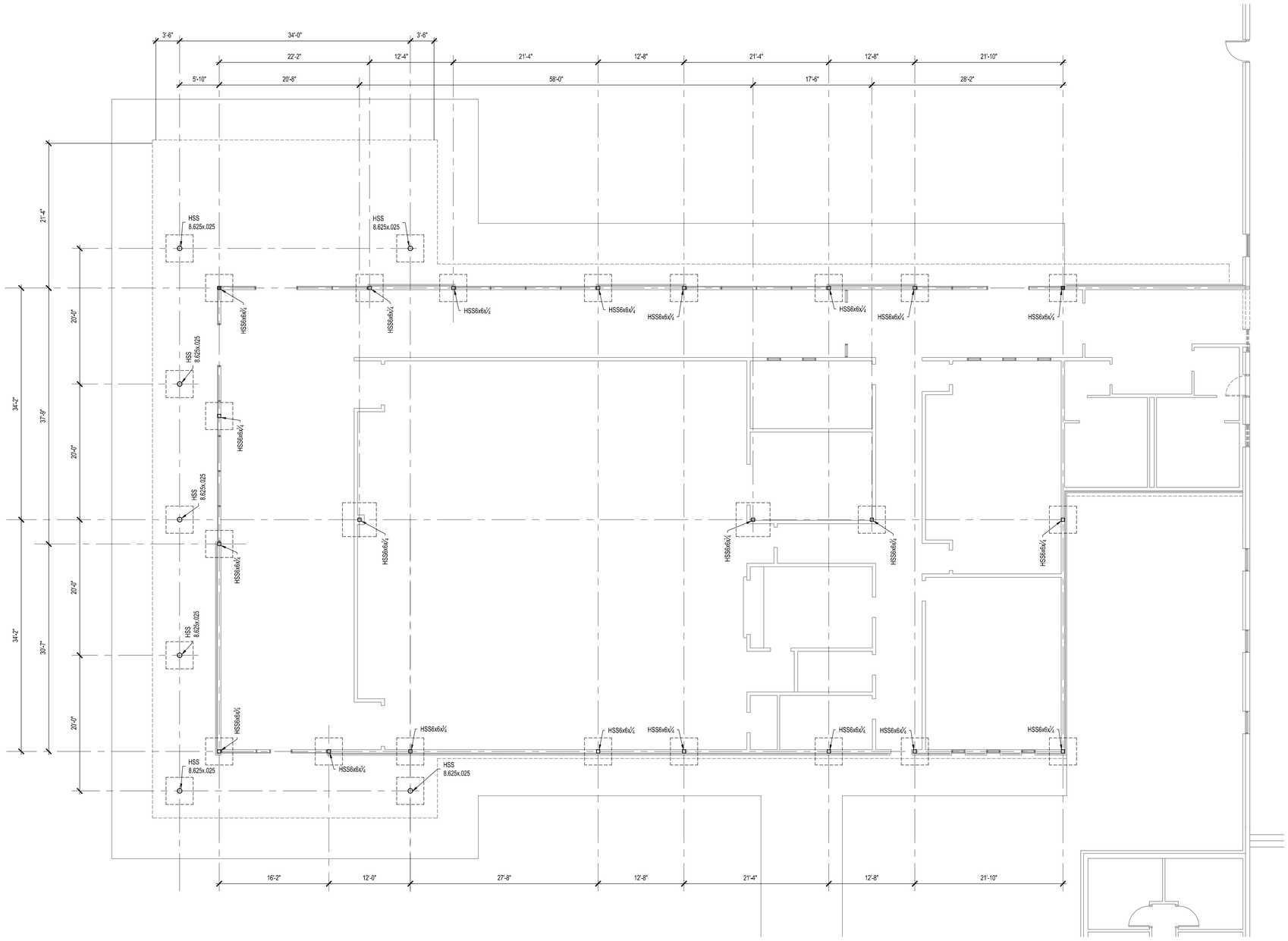

100 FOUNDATION PLAN
1/8"=1'-0"

ALPHA BLDG SET 08-27-2024

FOUNDATION NOTES

1. FFE = AS SHOWN ON PLAN.
2. STEP FOOTINGS DOWN BELOW MECHANICAL, ELECTRICAL, OR PLUMBING LINES AS REQUIRED TO AVOID INTERFERENCE. SEE TYP FOOTING STEP DETAIL. COORDINATE W/ OTHER TRADES. PROVIDE PIPE SLEEVE TWO PIPE SIZES GREATER THAN THE PIPE PASSING THROUGH THE WALL.
3. WHERE UTILITY LINES PASS UNDER A FOOTING, PROVIDE RELIEVING ARCH FOR PROTECTION.

CONC SLAB NOTES

1. FLOOR SLAB & SIDEWALKS SHALL BE 4" THICK CONC REINF W/ 6x6-W1.4xW1.4 WWF @ CENTER OF SLAB (UNLESS NOTED OTHERWISE). SEE PLAN FOR FINISHED FLOOR ELEVATIONS. (REFER TO ARCHITECTURAL DRAWINGS FOR SIDEWALK, PLANTER, & PAVER LOCATIONS & DETAILS.
2. PROVIDE 4" THICK GRADED AGGREGATE BASE & 10 MIL. POLYETHYLENE MOISTURE BARRIER UNDER INTERIOR FLOOR SLAB. LAP JOINTS OF MOISTURE BARRIER 6" MIN & TAPE JOINTS.
3. CONDUITS & PIPES EMBEDDED IN SLABS:
   - 3.1. SHALL NOT BE LARGER IN OUTSIDE DIM THAN ⅓ THE OVERALL THICKNESS OF SLAB.
   - 3.2. SHALL NOT BE SPACED CLOSER THAN THREE DIAMETERS OR WIDTHS ON CENTER.
   - 3.3. MIN SLAB THICKNESS OF 2½" MUST BE MAINTAINED OVER THE EMBEDDED ITEMS.

FOOTING SCHEDULE

MARK	SIZE	THK	REINF	BASE PL
F-2.0	2'-0"x2'-0"	12"	(3)-#4 EW, BOT	12"X12"X½"
F-3.0	3'-0"x3'-0"	12"	(3)-#5 EW, BOT	12"x12"x½"
F-3.5	3'-6"x3'-6"	12"	(4)-#5 EW, BOT	12"x12"x½"
F-4.0	4'-0"x4'-0"	12"	(5)-#5 EW, BOT	12"x12"x½" & 12"x17"x1"
F-5.0	5'-0"x5'-0"	12"	(6)-#5 EW, BOT	12"x12"x½"
F-5.5x4	4'-0"x5'-6"	12"	(6)-#5 EW, BOT	12"x12"x½"
F-6.0	6'-0"x6'-0"	16"	(7)-#6 EW, BOT	12"x12"x½"

* SEE DETAILS FOR BASE PLATES ON TOP OF FOUNDATION WALLS OR PIERS *

F-____ = FOOTING SIZE. SEE FOOTING SCHEDULE FOR SIZE & REINF. REQUIREMENTS

(-X'-X") = TOP OF FOOTING DISTANCE BELOW FINISHED FLOOR ELEVATION

OCONEE ENGINEERING L.L.C.
STRUCTURAL ENGINEERING
ATHENS, GA / LAKE OCONEE
P.O. Box 116
2700 Bowman Pond Road
Greensboro, GA 30642
P: (770) 313-0332
e-mail: admin@oconeeengineering.com

R.L. COUSINS COMMUNITY CENTER
8134 GEIGER STREET, COVINGTION, GA
FOR: SUNBELT BUILDERS

MARK	DATE	BY	DESCRIPTION
	4-22-2024		ISSUE FOR PRICING

DESIGNED:
DRAWN:
CHECKED:
APPROVED:

OE PROJECT NO: OE24007
FILE NAME: OE24007-S-CORE
ORIGINAL DRAWING SIZE: 36"x24"
DATE: 4-22-2024

© COPYRIGHT 2024. UNAUTHORIZED USE OF ANY KIND, INCLUDING USE ON OTHER PROJECTS, IS PROHIBITED. ANY ALTERATIONS OR REPRODUCTIONS MUST BE AUTHORIZED IN WRITING BY OCONEE ENGINEERING, L.L.C.

FOUNDATION PLAN

S-1.0
SHEET 4 OF 10

WMS01
WBFS1 | OE24007-C-BS-DE-SBC4.dwg | RL Cousins 2023093 baseline plans bw 02284
PRINTED BY: RALPH BOSWELL | DATE: Monday, April 22, 2024 3:13:34 AM | DRAWING FILE: C:\work\Oconeeeng\OE24007\OE24007-S-CORE.dwg | LAST MODIFIED: Monday, April 22, 2024 11:04:27 AM

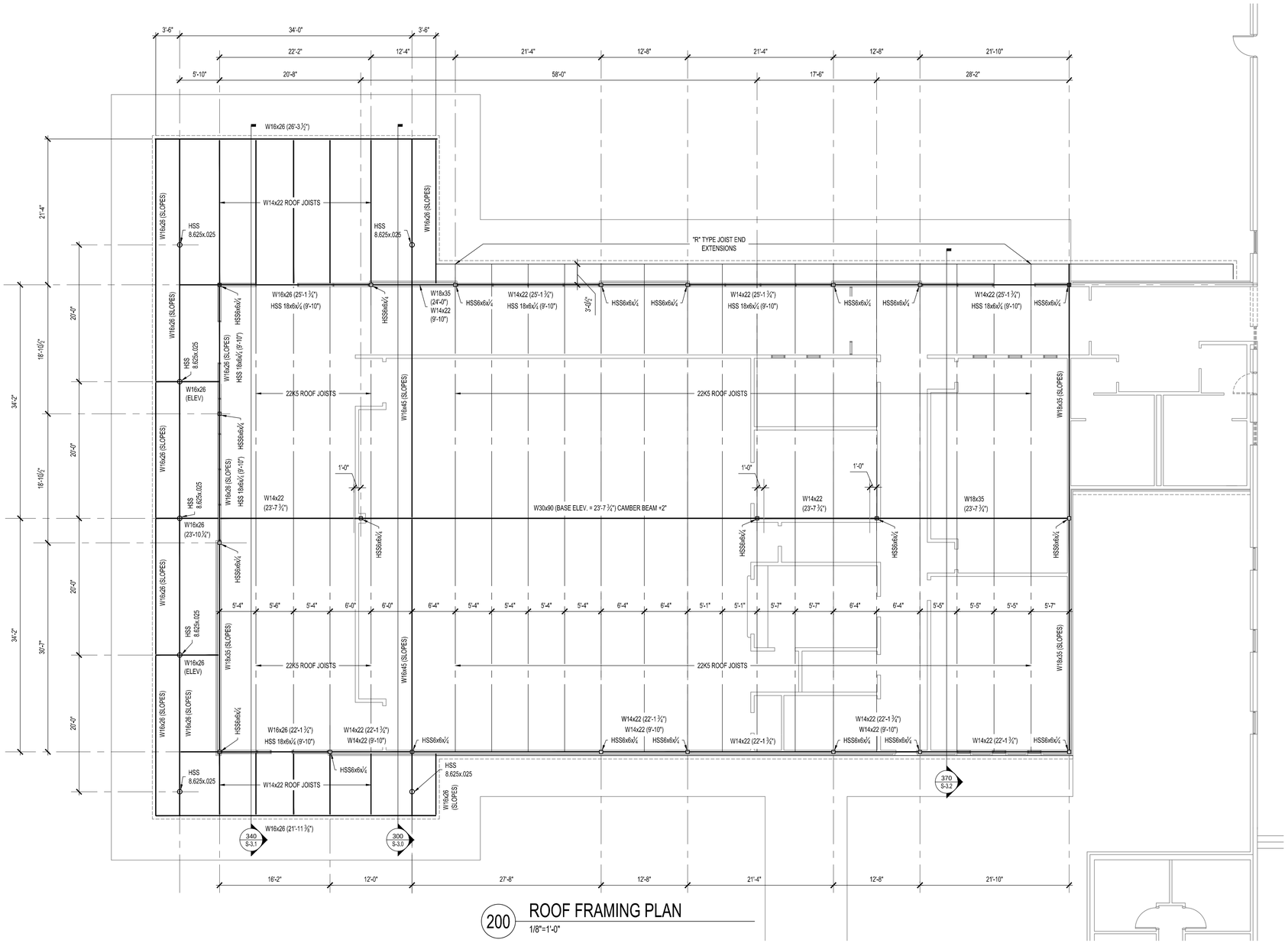

200 ROOF FRAMING PLAN
1/8"=1'-0"

ROOF FRAMING NOTES:

1. PROVIDE ROOF DECK SUPPORT L3"x3"x¼ OR AS SHOWN ON DETAILS AT JOIST BEARING EDGES OF ROOF DECK PERIMETER. WELD ANGLE TO EACH JOIST TOP CHORD. LOCATE JOINTS IN CONTINUOUS ANGLE AT JOIST LOCATIONS. WELD ANGLE TO ANGLE AND ANGLE TO JOIST.
2. ROOF TOP UNIT CURBS SHALL BEAR ON STEEL FRAMING PER DETAIL 427. ROOF TOP UNIT SIZES AND DIMENSIONS TO BE COORDINATED WITH MECHANICAL SUPPLIER.
3. DECK WELD PATTERN SHALL BE 36/4 WITH 4 SIDELAP FASTENERS PER SPAN UNLESS NOTED OTHWERWISE. SEE DETAIL 440.

BEAM (X'-X") - NUMBER IN PARENTHESIS INDICATES TOP OF BEAM/CHANNEL AS MEASURED FROM LOWER FINISHED FLOOR

X.X K - INDICATES ADDITIONAL LOADING TO JOIST OR BEAM. FORCES INDICATED ARE ASD LOADS.

COMPLETE SHOP DRAWINGS FOR CONSTRUCTION OF EACH BUILDING COMPONENT NOT DESIGNED BY THE DESIGN TEAM-OF-RECORD AND NOT SPECIFIED ON THE PROJECT CONSTRUCTION DOCUMENTS SHALL BE SEALED AND SIGNED BY A PROFESSIONAL ENGINEER REGISTERED IN THE STATE OF GEORGIA AND SHALL BE AVAILABLE AT THE JOB SITE DURING TIMES OF INSPECTION.

SHOP DRAWINGS FOR THE FOLLOWING BUILDING COMPONENTS NOT SPECIFIED ON THE PROJECT CONSTRUCTION DOCUMENTS APPROVED FOR BUILDING PERMIT SHALL BE SEALED AND SIGNED BY A PROFESSIONAL ENGINEER REGISTERED IN THE STATE OF GEORGIA AND SUBMITTED TO MUNICIPAL BUILDING PLAN REVIEW FOR REVIEW AFTER APPROVAL BY THE PROJECT ENGINEER-OF-RECORD:
1) AWNINGS / CANOPIES

BOTTOM OF ALL FOUNDATIONS SHALL EXTEND A MINIMUM OF 12" BELOW TO OF FINISHED GRADE.

PROVIDE MINIMUM 10 MIL. POLYETHYLENE MOISTURE BARRIER WITH JOINTS TAPED AND LAPPED NOT LESS THAN 6". PROVIDE MOISTURE BARRIER DIRECTLY BENEATH ALL INTERIOR CONCRETE SLABS ON GRADE.

THE DESIGN OF CONCRETE STRUCTURAL ELEMENTS, INCLUDING WALLS, FORMED SLABS, BEAMS, AND COLUMNS IS IN ACCORDANCE WITH ACI 318-11 BUILDING CODE REQUIREMENTS FOR STRUCTURAL CONCRETE.

BOLTED CONNECTIONS SHALL BE ASSEMBLED AND INSPECTED IN ACCORDANCE WITH RCSC-2009 SPECIFICATION FOR STRUCTURAL JOINTS USING HIGH-STRENGTH BOLTS.

STRUCTURAL WELDED JOINTS SHALL CONFORM TO THE PROVISIONS OF AWS D1.1-10, STRUCTURAL WELDING CODE BY THE AMERICAN WELDING SOCIETY. PROOF OF WELDER CERTIFICATION SHALL BE AVAILABLE AT THE JOB SITE DURING TIMES OF INSPECTION.

OCONEE ENGINEERING L.L.C.
STRUCTURAL ENGINEERING
ATHENS, GA / LAKE OCONEE
P.O. Box 116
2000 Danielsville Road
Greensboro, GA 30642
P: (770) 313-0302
e-mail: admin@oconeeengineering.com

R.L. COUSINS COMMUNITY CENTER
8134 GEIGER STREET, COVINGTION, GA

FOR: SUNBELT BUILDERS

MARK	DATE	BY	DESCRIPTION
	4-22-2024		ISSUE FOR PRICING

DESIGNED:
DRAWN:
CHECKED:
APPROVED:

OE PROJECT NO: OE24007
FILE NAME: OE24007-S-CORE
ORIGINAL DRAWING SIZE: 36"x24"
DATE: 4-22-2024

© COPYRIGHT 2024. UNAUTHORIZED USE OF ANY KIND, INCLUDING USE ON OTHER PROJECTS, IS PROHIBITED. ANY ALTERATIONS OR REPRODUCTIONS MUST BE AUTHORIZED IN WRITING BY OCONEE ENGINEERING, L.L.C.

ROOF FRAMING PLAN

S-1.1
SHEET 5 OF 10

ALPHA BLDG SET 08-27-2024

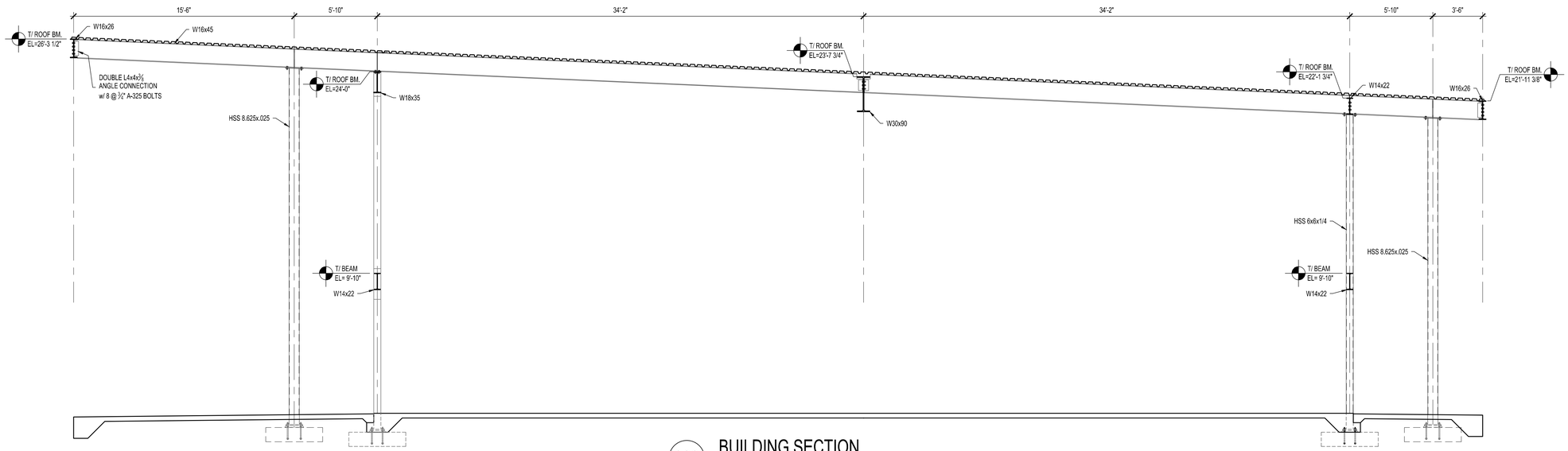

300 BUILDING SECTION
1/4"=1'-0"

ALPHA BLDG SET 08-27-2024

OCONEE ENGINEERING L.L.C.
STRUCTURAL ENGINEERING
ATHENS, GA / LAKE OCONEE
P.O. Box 116
2700 Bowman Pond Road
Greensboro, GA 30642
P: (770) 313-0932
e-mail: admin@oconeeengineering.com

R.L. COUSINS COMMUNITY CENTER
8134 GEIGER STREET, COVINGTION, GA
FOR: SUNBELT BUILDERS

MARK	DATE	BY	DESCRIPTION
	4-22-2024		ISSUE FOR PRICING

DESIGNED:
DRAWN:
CHECKED:
APPROVED:

OE PROJECT NO: OE24007
FILE NAME: OE24007-S-CORE
ORIGINAL DRAWING SIZE: 36"x24"
DATE: 4-22-2024

© COPYRIGHT 2024. UNAUTHORIZED USE OF ANY KIND, INCLUDING USE ON OTHER PROJECTS, IS PROHIBITED. ANY ALTERATIONS OR REPRODUCTIONS MUST BE AUTHORIZED IN WRITING BY OCONEE ENGINEERING, L.L.C.

SECTIONS

S-3.0
SHEET 6 OF 10

BASES
XREFS: I:\2024\OE24007-S-SR\OE-SR\OE24007-S-CORE.dwg | RL Cousins 2020\12 Investor plans\ss-1020204
PRINTED BY: RALPH BOSWELL | DATE: Monday, April 22, 2024 3:15:36 AM | DRAWING FILE: C:\work\Oconeeeng\OE24007\OE24007-S-CORE.dwg | LAST MODIFIED: Monday, April 22, 2024 10:42:27 AM

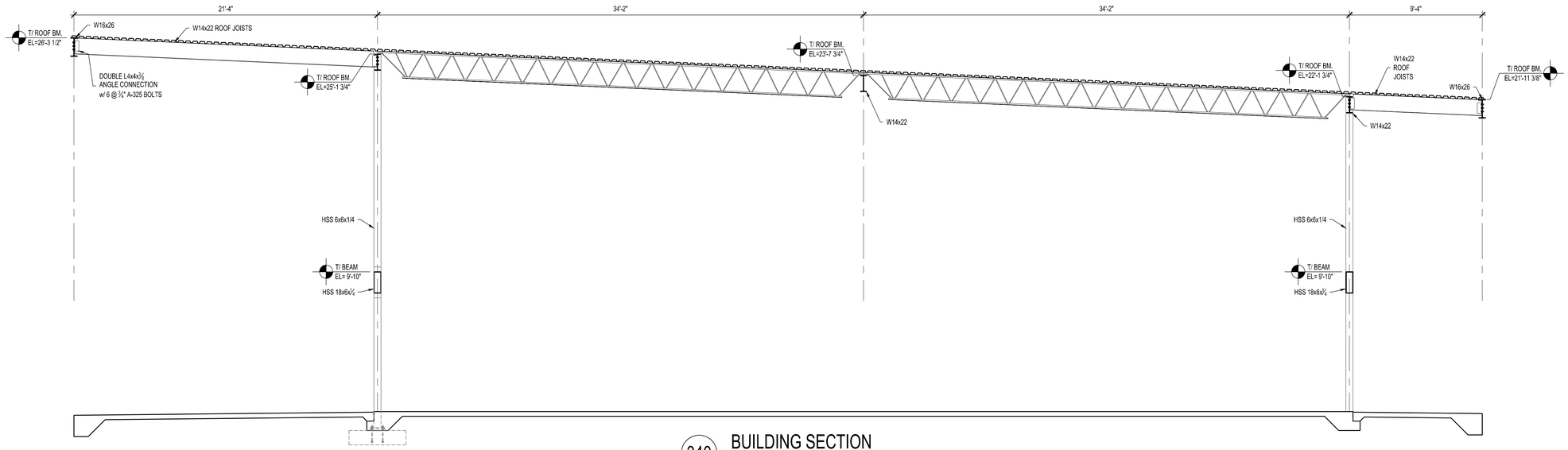

340 BUILDING SECTION
1/4"=1'-0"

ALPHA BLDG SET 08-27-2024

OCONEE ENGINEERING L.L.C.
ATHENS, GA / LAKE OCONEE
STRUCTURAL ENGINEERING
P.O. Box 116
2700 Bowman Pond Road
Greensboro, GA 30642
P: (770) 313-0932
e-mail: admin@oconeeengineering.com

R.L. COUSINS COMMUNITY CENTER
8134 GEIGER STREET, COVINGTION, GA
FOR: SUNBELT BUILDERS

MARK	DATE	BY	DESCRIPTION
	4-22-2024		ISSIUE FOR PRICING

DESIGNED:
DRAWN:
CHECKED:
APPROVED:

OE PROJECT NO: OE24007
FILE NAME: OE24007-S-CORE
ORIGINAL DRAWING SIZE: 36"X24"
DATE: 4-22-2024

© COPYRIGHT 2024. UNAUTHORIZED USE OF ANY KIND, INCLUDING USE ON OTHER PROJECTS, IS PROHIBITED. ANY ALTERATIONS OR REPRODUCTIONS MUST BE AUTHORIZED IN WRITING BY OCONEE ENGINEERING, L.L.C.

SECTIONS

S-3.1
SHEET 7 OF 10

BIM 360
RFIT5 | OE24007-S-BS-DE-Sbx24.dwg | RL Cousins 2023\12 Investor phase two 022024
PRINTED BY: RALPH BOSWELL | DATE: Monday, April 22, 2024 3:15:37 AM | DRAWING FILE: C:\work\Oconeeeng\24\24007-OE24007-S-CORE.dwg | LAST MODIFIED: Monday, April 22, 2024 10:42:27 AM

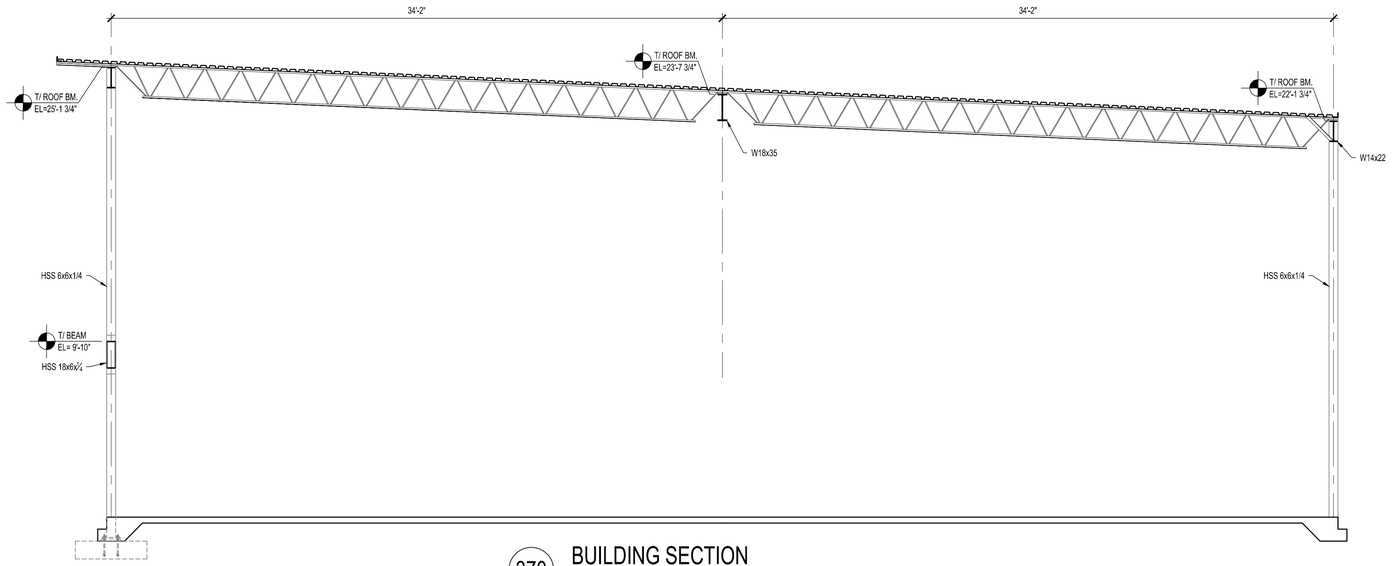

370 BUILDING SECTION
1/4"=1'-0"

ALPHA BLDG SET 08-27-2024

OCONEE ENGINEERING L.L.C.
STRUCTURAL ENGINEERING
ATHENS, GA / LAKE OCONEE
P.O. Box 116
2700 Bowman Pond Road
Greensboro, GA 30642
P: (770) 313-0302
e-mail: admin@oconeeengineering.com

R.L. COUSINS COMMUNITY CENTER
8134 GEIGER STREET, COVINGTION, GA
FOR: SUNBELT BUILDERS

MARK	DATE	BY	DESCRIPTION
	4-22-2024		ISSUE FOR PRICING

DESIGNED:
DRAWN:
CHECKED:
APPROVED:

OE PROJECT NO: OE24007
FILE NAME: OE24007-S-CORE
ORIGINAL DRAWING SIZE: 36"X24"
DATE: 4-22-2024

© COPYRIGHT 2024. UNAUTHORIZED USE OF ANY KIND, INCLUDING USE ON OTHER PROJECTS, IS PROHIBITED. AUTHORIZED IN WRITING BY OCONEE ENGINEERING, L.L.C.

SECTIONS

S-3.2
SHEET 8 OF 10

BMUSS
XREFS: OE24007-S-BSUS-Sitx24.dwg; RL Cousins 2023\12 Investor plans set-122023.dwg
PRINTED BY: RALPH BOSWELL | DATE: Monday, April 22, 2024 3:15:38 AM | DRAWING FILE: C:\work\Oconeeeng\OE24007\OE24007-S-CORE.dwg | LAST MODIFIED: Monday, April 22, 2024 10:42:27 AM

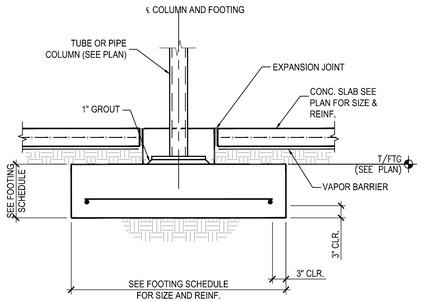

320 FOOTING SECTION
N.T.S.

NOTE: SEE DETAIL 400 FOR BASEPLATE AND ANCHOR BOLTS

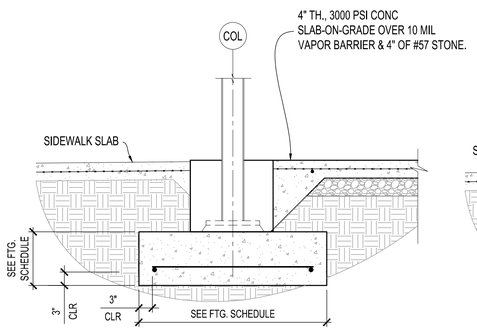

321 FOOTING @ STOREFRONT
3/4"=1'-0"

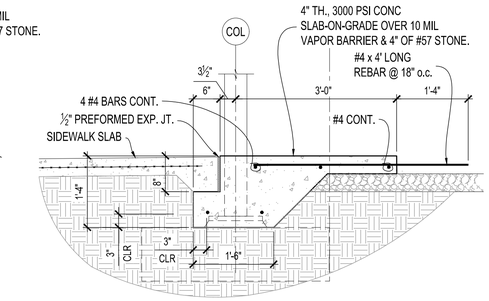

340 TURN-DOWN @ STOREFROST
3/4"=1'-0"

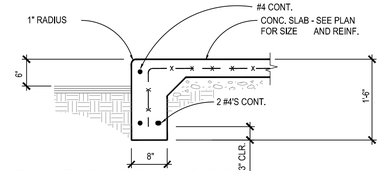

341 TURN-DOWN @ SIDEWALK
N.T.S.

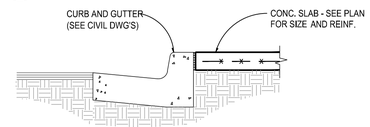

342 CURB AND GUTTER
N.T.S.

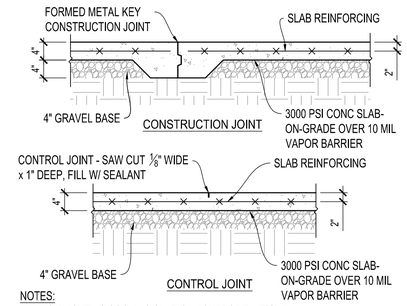

NOTES:
1. SAW CUT AS SOON AS SLAB CAN SUPPORT WEIGHT.
2. CONTROL JOINTS MAY BE REPLACED WITH CONSTRUCTION JOINTS.
3. CONTROL / CONSTRUCTION JOINTS SHALL BE SPACED NO MORE THAN 12 FEET IN EITHER DIRECTION. SLAB AREAS BOUNDED BY CONTROL OR CONST. JOINTS SHALL HAVE LENGTHS NO MORE THAN 2x THEIR WIDTHS.
4. DO NOT CUT CONTROL JOINTS IN ELEVATED SLABS.

343 4" SLAB ON GRADE JOINT DETAILS
3/4"=1'-0"

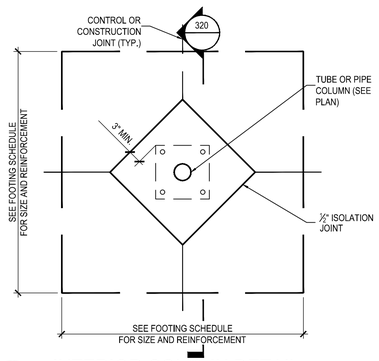

344 INTERIOR COLUMN DETAIL
N.T.S. NOTE: SEE DETAIL 400 FOR BASEPLATE AND ANCHOR BOLTS

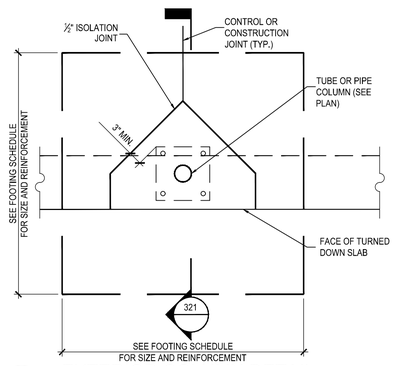

345 EXTERIOR COLUMN DETAIL
N.T.S. NOTE: SEE DETAIL 400 FOR BASEPLATE AND ANCHOR BOLTS

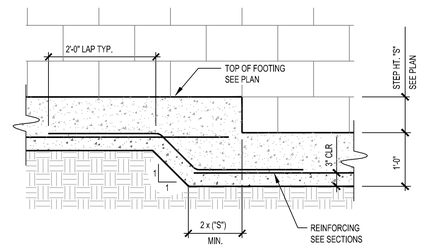

372 STEPPED WALL FOOTING
N.T.S.

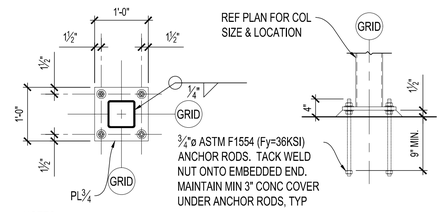

NOTES:
1. COLUMN TO BE CENTERED ON BASE PLATE, TYP.
2. ANCHOR ROD PROJECTION TO BE 4", TYP UNO.
3. 1 1/16"ø HOLES FOR ANCHOR RODS W/ ASTM F844 WASHERS, TYP.
4. TO ALLOW FOR ADDITIONAL TOLERANCE FOR ANCHOR ROD PLACEMENT, MAX 1 5/16" HOLES MAY BE USED FOR ANCHOR RODS W/ A36 PL ½x2x0'-2" PLATE WASHERS.

400 BASE PLATE DETAIL
3/4"=1'-0"

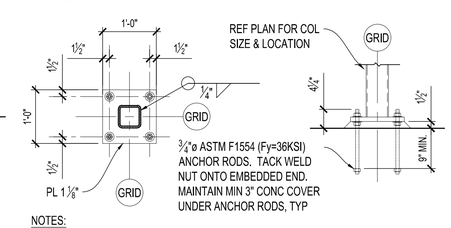

NOTES:
1. COLUMN TO BE CENTERED ON BASE PLATE, TYP.
2. ANCHOR ROD PROJECTION TO BE 4", TYP UNO.
3. 1 1/16"ø HOLES FOR ANCHOR RODS W/ ASTM F844 WASHERS, TYP.
4. TO ALLOW FOR ADDITIONAL TOLERANCE FOR ANCHOR ROD PLACEMENT, MAX 1 5/16" HOLES MAY BE USED FOR ANCHOR RODS W/ A36 PL ½x2x0'-2" PLATE WASHERS.

401 MOMENT BASE PLATE DETAIL
3/4"=1'-0"

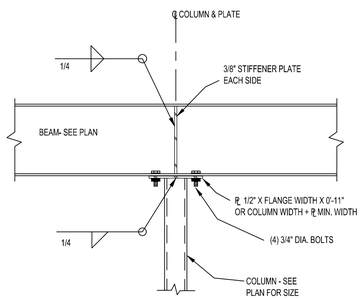

420 BEAM OVER COLUMN DETAIL
N.T.S.

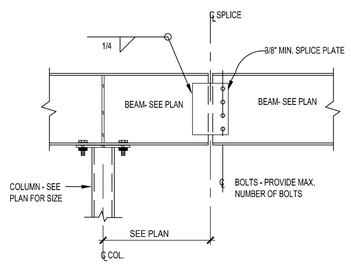

421 BEAM SPLICE DETAIL
NTS

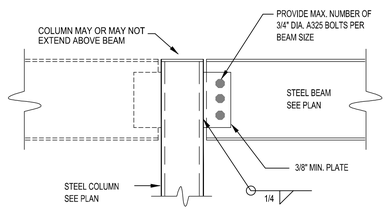

425 TYP. STEEL BEAM CONN.
N.T.S.

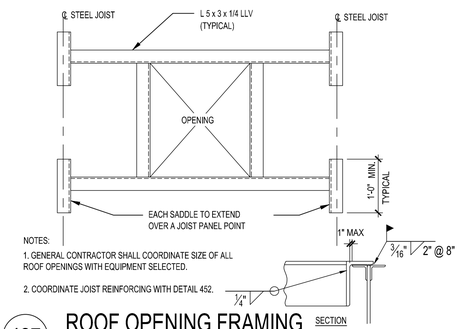

NOTES:
1. GENERAL CONTRACTOR SHALL COORDINATE SIZE OF ALL ROOF OPENINGS WITH EQUIPMENT SELECTED.
2. COORDINATE JOIST REINFORCING WITH DETAIL 452.

427 ROOF OPENING FRAMING
N.T.S.

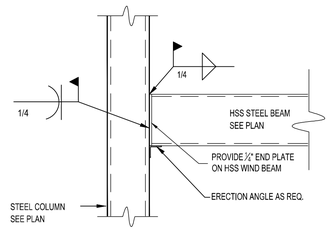

428 TUBE COLUMN TO TUBE BEAM
N.T.S.

ALPHA BLDG SET 08-27-2024

OCONEE ENGINEERING L.L.C.
ATHENS, GA / LAKE OCONEE
STRUCTURAL ENGINEERING
P.O. Box 116
2000 Barrow Pond Road
Greensboro, GA 30642
P: (770) 313-0332
e-mail: admin@oconeeengineering.com

R.L. COUSINS COMMUNITY CENTER
8134 GEIGER STREET, COVINGTION, GA
FOR: SUNBELT BUILDERS

MARK	DATE	BY	DESCRIPTION
	4-22-2024		ISSUE FOR PRICING

DESIGNED:
DRAWN:
CHECKED:
APPROVED:

OE PROJECT NO: OE24007
FILE NAME: OE24007-S-CORE
ORIGINAL DRAWING SIZE: 36"x24"
DATE: 4-22-2024

© COPYRIGHT 2024. UNAUTHORIZED USE OF ANY KIND, INCLUDING USE ON OTHER PROJECTS, IS PROHIBITED. AUTHORIZED IN WRITING BY OCONEE ENGINEERING, L.L.C.

FOUNDATION & FRAMING DETAILS

S-4.0
SHEET 9 OF 10

IMAGES
XREFS: | OE24007-S-BS-OE-36x24.dwg | BL Counts 20250712 beenaBin phase two 032824
PRINTED BY: RALPH BISORNELL | DATE: Monday, April 22, 2024 1:18:45 AM | DRAWING FILE: C:\work\Oconee\oe24\OE07\OE24007-S-CORE.dwg | LAST MODIFIED: Monday, April 22, 2024 1:04:27 AM

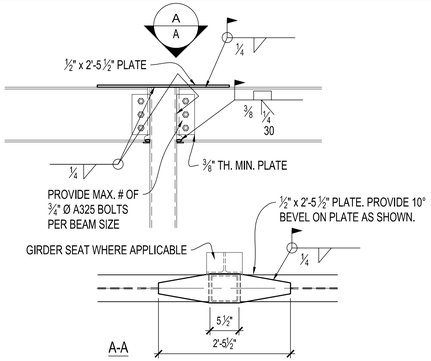

430 MOMENT CONNECTION
N.T.S.

METAL ROOF DECK SHALL BE SUPPLIED IN 36" WIDTHS. ROOF DECK SHALL BE ATTACHED TO EACH SUPPORT BY WELDING IN ACCORDANCE WITH WELD PATTERN NOTED ON DRAWINGS. (SEE SCHEDULE BELOW FOR APPLICABLE WELD PATTERN.) WELDS SHALL BE 5/8" ROUND PUDDLE WELDS. METAL ROOF DECK SIDELAPS SHALL BE ATTACHED WITH INDICATED NUMBER OF SIDELAP FASTENERS BETWEEN SUPPORTS AS NOTED ON DRAWINGS. SIDELAP FASTENERS SHALL BE #10 DRILL- POINT, SELF-TAPPING SCREWS. MINIMUM SIDELAP ATTACHMENT SHALL BE ONE FASTENER AT MIDPOINT OF DECK SPAN BETWEEN SUPPORTS. ATTACHMENT AT PERIMETER OF DECK SHALL BE EQUAL TO ATTACHMENT AT DECK SHEET LAPS AND DECK SHEET ENDS. ANY PARTIAL OR SKEWED SHEETS SHALL BE ATTACHED AT EVERY FLUTE REGARDLESS OF DECK WELD PATTERN.

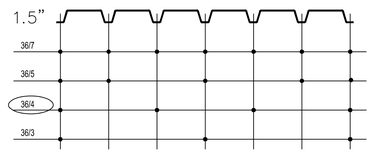

440 ROOF DECK ATTACHMENT DETAIL
N.T.S.

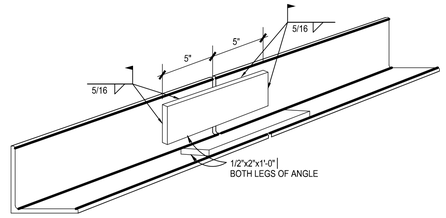

442 CONTINUOUS DECK BRN'G ANGLE SPLICE
N.T.S.

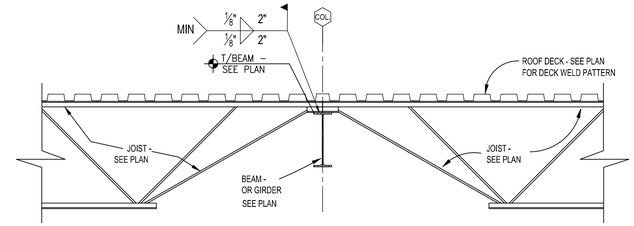

446 ROOF / FLOOR JST BRN'G DETAIL
N.T.S.

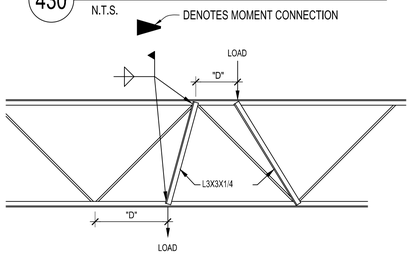

WHERE DIMENSION "D" IS GREATER THAN 6" AND THE CONCENTRATED LOAD IS GREATER THAN 100#, THE JOIST MUST BE REINFORCED BY FIELD APPLYING AN L3x3x1/4 WEB MEMBER ON THE JOIST FROM THE POINT OF THE LOAD TO THE NEAREST PANEL POINT ON THE OPPOSITE CHORD.

452 JOIST REINFORCING DETAIL
N.T.S.

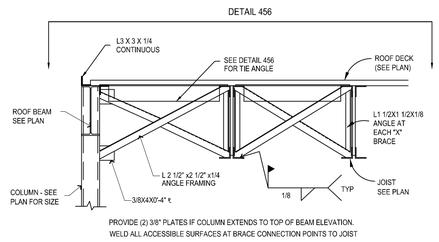

PROVIDE (2) 3/8" PLATES IF COLUMN EXTENDS TO TOP OF BEAM ELEVATION.
WELD ALL ACCESSIBLE SURFACES AT BRACE CONNECTION POINTS TO JOIST

454 COLUMN "X" BRACING
N.T.S.

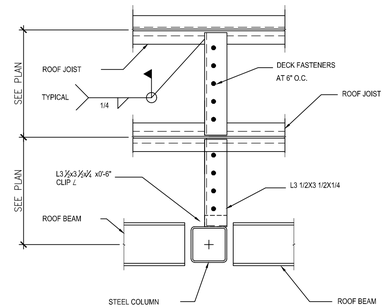

LOCATE L3 1/2 AT BOTTOM FLUTE OF DECK TO ALLOW FASTENING

456 COLUMN TIE PLAN DETAIL
N.T.S.

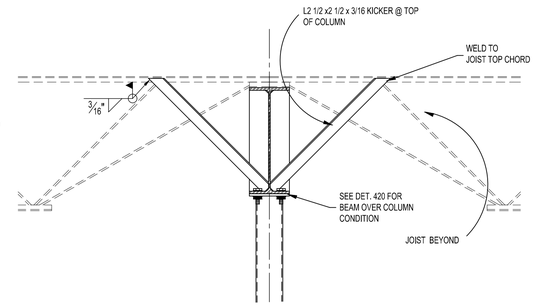

455 BEAM BRACING DETAIL
N.T.S.

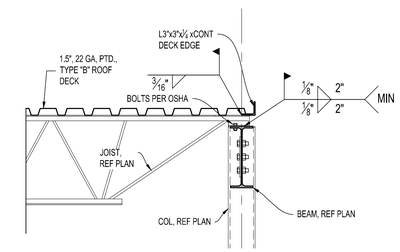

463 ROOF JOIST DETAIL
N.T.S.

ALPHA BLDG SET 08-27-2024

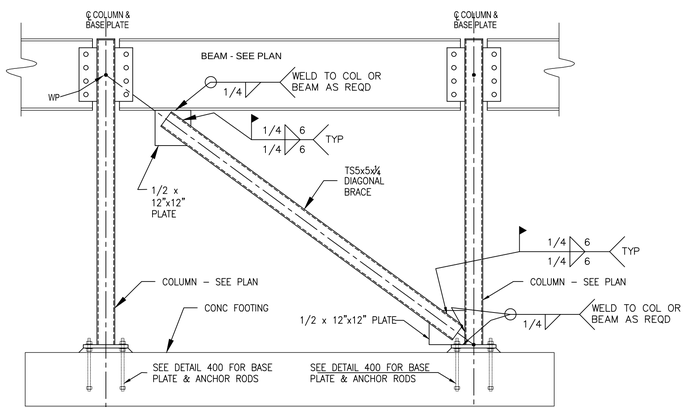

478 TYP. DIAGONAL BRACE DETAIL
N.T.S.

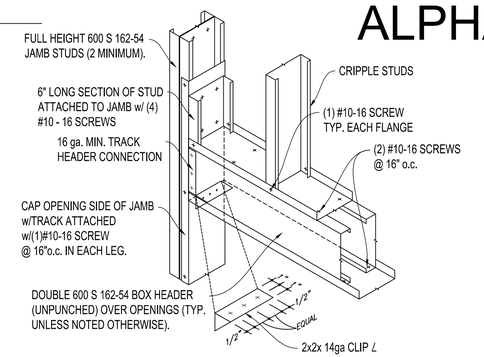

511 HEADER FRAMING DETAIL
N.T.S.

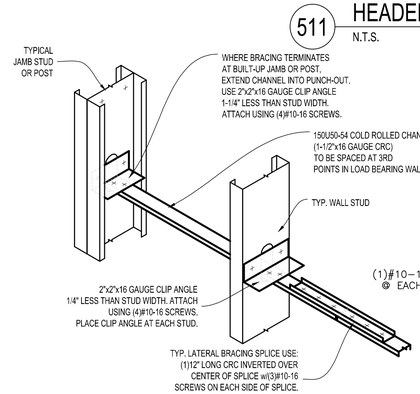

560 CRC LATERAL BRACING
N.T.S.

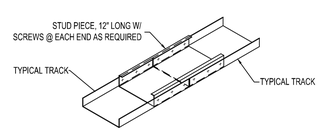

558 TRACK SPLICE CONNECTION
N.T.S.

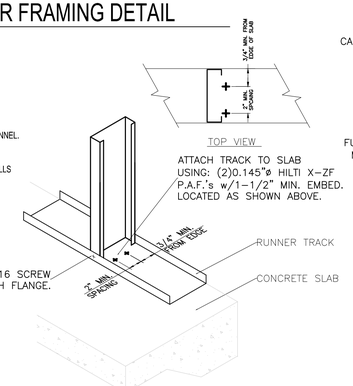

565 STUD TO TRACK DETAIL
N.T.S. ANCHORAGE TO STRUCTURE w/(2)P.A.F.'s

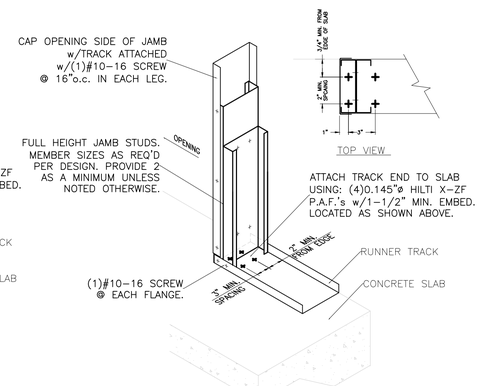

568 DOOR JAMB ANCHORAGE
N.T.S. (2)JAMB ANCHORAGE TO STRUCTURE

OCONEE ENGINEERING L.L.C.
STRUCTURAL ENGINEERING
ATHENS, GA / LAKE OCONEE
P.O. Box 116 / 1000 Hillsboro Pond Road
Greensboro, GA 30642
P: (770) 313-0332
e-mail: admin@oconeeengineering.com

R.L. COUSINS COMMUNITY CENTER
8134 GEIGER STREET, COVINGTION, GA
FOR: SUNBELT BUILDERS

MARK	DATE	BY	DESCRIPTION
	4-22-2024		ISSUE FOR PRICING

DESIGNED:
DRAWN:
CHECKED:
APPROVED:

OE PROJECT NO: OE24007
FILE NAME: OE24007-S-CORE
ORIGINAL DRAWING SIZE: 36"X24"
DATE: 4-22-2024

© COPYRIGHT 2024. UNAUTHORIZED USE OF ANY KIND, INCLUDING USE ON OTHER PROJECTS, IS PROHIBITED. ANY ALTERATIONS OR REPRODUCTIONS MUST BE AUTHORIZED IN WRITING BY OCONEE ENGINEERING, L.L.C.

FRAMING DETAILS

S-4.1
SHEET 10 OF 10

BM:NSS
XREFS: I:\OE24007-S-BUILDS-BN-04.dwg; RL Cousins 2202012 basedbe-phase two 020204
PRINTED BY: RALPH BOSWELL | DATE: Monday, April 22, 2024 9:15:41 AM | DRAWING FILE: C:\work\Oconeeeng\OE24007\OE24007-S-CORE.dwg | LAYT MODIFIED: Monday, April 22, 2024 10:42:27 AM

MECHANICAL SPECIFICATIONS

1) Provide all heating, ventilation and air conditioning items indicated on the drawings, described in this specification or required for a complete and proper installation.

2) Comply with all pertinent codes, ordinances and regulations. Refer to website for Dept. of Community Affairs for current Codes Editions.

3) The contractor shall not attempt to precisely scale dimensions from these drawings to obtain construction dimensions and clearances. The contractor shall verify all actual dimensions and clearances. Although these plans are diagrammatic in nature, they shall be followed as closely as site conditions, new construction, and work by other trades shall permit. Deviations from these drawings, which are required to conform to the available space or the actual building construction, shall be made at no additional cost to the owner.

4) Furnish without extra charge, any additional material and labor required to comply with the above codes and standards, even though the work may not be described in the contract documents. Where the requirements of the contract documents exceed the requirements of the above codes and standards, the contract documents shall take precedence.

5) All equipment and material shall be new and of first quality. Equipment and material shall be the same or equal to the basis of design listed on these drawings and shall be UL listed.

6) Cooperate and coordinate with other trades in order that all systems in the work may be installed in the best arrangement.

7) Examine the areas and conditions under which work of this section will be installed. Correct conditions detrimental to the proper and timely completion of the work. Notify Architect of any discrepancies. Do not proceed until unsatisfactory conditions have been corrected.

8) Avoid interference with structure, and with work of other trades. Install all equipment per manufacturer's instructions. Install accessible parts, including equipment, coils, valves, dampers, controls, and filters with adequate clearance for inspection, adjustments, repair and replacement.

9) All other materials not specifically described but required for a complete and proper installation shall be as selected by the contractor subject to acceptance by the Engineer.

10) All ductwork shall be fabricated from galvanized sheet metal duct and conform to SMACNA "HVAC Duct Construction Standards-Metal and Flexible. Seal all joints in ductwork with mastic sealant.

11) Flexible duct: Flex master; Atco UPC#36(R-6.0); Atco UPC#31 (R-8) or Thermaflex, Type 3, insulated. 5'-0" Maximum length unless noted otherwise. Class 1 rating with R-value of 6.0 when located inside building insulation envelope and R-8 when located outside building insulation envelope. Install with no more than 135 degrees maximum of total bends per run. Maximum individual bend shall not exceed 45 degrees each. Support at five feet on centers with hangers having at least 2-inches of width at duct contact points. Flexible connectors shall not pass through any wall floor or ceiling weather rated or not. Provide 36-onches of metal duct at penetration of draft stops, fire walls and smoke walls.

12) Duct Liner: Owens Corning Aeroflex Plus, or equivalent. Incombustible glass fiber complying with ASTM C 1071; flexible blanket; impregnated surface and edges coated with acrylic polymer shown to be fungus and bacteria resistant by testing to ASTM G 21. Apparent Thermal Conductivity: Maximum of 0.31 at 75 degrees F. Service Temperature: 250 degrees F. Density: 1.5 pounds/cubic foot. Install using adhesive (50% coverage) and galvanized steel fasteners with welded press-on head Thickness: 1-inch.

13) Condensate drain piping shall be ASTM D2665 PVC with solvent welded fittings. Drain piping shall be no smaller than the drain connection size on equipment. Slope at 1/8 inch per foot continuously toward drains. All indoor condensate drain piping shall be insulated with preformed flexible plastic cellular foam. All outdoor condensate drain piping shall be primed and painted with a coating system recommended by the piping manufacturer for protection against deterioration from weather and UV-light exposure. All piping shall be adequately supported to maintain proper slope and avoid sagging.

14) Refrigerant piping shall conform to manufacturer's recommendations and installation instructions. Refrigerant piping shall be ASTM B280 Type ACR or ASTM B88 Type L drawn copper tubing with wrought copper fittings. Insulate suction line with ½ thick flexible foamed plastic cellular foam (Armaflex or equivalent). All piping shall be adequately supported. Insulation installed outdoors shall be painted with two coats of Armacell WB coating or equivalent.

15) Thermostats: Provide 24 volt, programmable 24-hour, 7-day thermostat to control heating stages in sequence with delay between stages and supply fan to maintain temperature setting. For Heat Pumps include system selection switch heat-off-cool and fan control switch (auto-on), emergency heat switch (auxiliary/emergency heat indicator lights).

16) Provide fire and smoke rated flexible connections between fans and ducts. Material shall comply with NFPA 90A requirements for material in supply air stream.

17) Install all equipment in accordance with manufacturer's instructions and recommendations including clearances recommended for proper operation or service. All filters and serviceable parts shall be readily accessible.

18) Indoor duct insulation: Foil-faced fiberglass, Owens Corning type 75 or equal, 2.2" thick(R-6), unless the insulated duct is outside building insulation envelope (attic, crawlspace or unconditioned space) in which case the duct insulation thickness shall be 3 thick(R-8). Duct shall have a flame spread rating of not more than 25 and smoke developed rating of not more than 50. Glass-Fiber Insulation: All service duct wraps with foil scrim and having backing and a k-value of 0.30 at 75° F mean temperature and an average maximum density of 0.75 lb./cu. ft.

19) Outside duct Insulation: Insulate ducts and fittings with two, staggered layers of -inch foamed plastic sheet insulation, (Arma-Flex sheets) 6-pound density, having a thermal conductivity of not more than 0.28 at 75?F. Apply insulation with smooth side out of coating both surfaces to be joined completely with a thin coat of waterproof instant bonding adhesive. Adjacent sheets shall fit under compression. Apply a 16 mil embossed aluminum jacket with a 2-inch overlap at longitudinal and transverse joints, secured in place with -inch by .015-inch aluminum bands on 18-inch centers. Overall insulation value must be R-8 for exterior duct as per ASHRAE 90.1 & IECC.

20) All supply, return and outside air ducts shall be insulated. Install acoustical duct liner on the interior surface of the first five (5) linear feet of supply duct downstream and the return air plenum of all air handlers and packaged units. For packaged units PU-1 & PU-2 provide ductliner for first five feet of ductwork located within building envelop.No liner shall be provided for ductwork located at exterior. Insulate the concealed tops of all ceiling mounted supply air diffusers with foil-faced fiberglass, 1.5#/cubic foot density, 2 thick. Seal edges to ceiling grid with foil faced tape to provide vapor tight seal.

21) All low-pressure duct branches shall contain manual balancing dampers. Manual balancing dampers shall also be installed in the continuation of the main, if the main duct is smaller or the same size as the branch duct, or if the continuation of the main serves only one device.

22) Make all duct elbows right angle type with single -thickness turning vanes or construct with centerline radius 1-1/2 times the duct width.

23) Duct sizes shown on plans are clear, interior dimensions. Duct sizes shown shall be enlarge to allow for liner at locations of interior liner.

24) Do not cut into or reduce the size of any structural member without the permission of the Architect.

25) Provide weather-proof flashing at all duct and pipe penetrations through the building walls and roof. As a minimum, flashings shall be designed and installed in accordance with SMACNA standards. Flashings shall be guaranteed weatherproof.

26) Support all HVAC units, ductwork, piping and other appurtenances from structure, provide vibration isolation at all fans which are not internally isolated. Provide hanger rod with built in rubber-in-shear isolator. Between drain pan and unit provide 4 each rubber-in-shear isolator. Do not attach vibration isolator to drain pan. Do not screw or drive fasteners into non-structural components such as roof decks or non-load bearing walls.

27) Thoroughly clean all components and remove all dirt, scale, oil, and other foreign substances. Provide clean air filters for all equipment.

28) Perform all tests necessary to demonstrate the integrity of the complete installation to the approval of the Engineer and all other authorities having jurisdiction. Make all adjustments necessary and balance the completed system in accordance with the data shown. Balance the systems in accordance with NEBB or AABC standards. Acceptable tolerances shall be minus ten percent to plus five percent of all measurements. Balancing shall be done by an independent licensed (by NEBB or AABC) TAB contractor. Make the following tests and submit reports to the Architect:

a) Airflow rate at each supply, return and exhaust outlet or inlet.
b) Total airflow rate and total static pressure for each supply and exhaust fan. Test exhaust fans with room doors closed.
c) Motor speed, for multiple speed fans (e.g. high, medium, low).
d) For direct drive fans, provide speed settings and actual rpm, including ECM motor driven fans
e) Provide fan and motor rpm for belt driven fans. Provide sheave sizes.
f) Outside airflow rate to each HVAC unit and supply fan.
g) Motor current (and compare with nameplate data) at all motors.
h) Entering and leaving air dry-bulb and wet-bulb conditions at all cooling coils.
i) Heat output capacity for unit heaters, heating devices and coils (kW or MBH).
j) Manufacturer, model and serial number for each piece of HVAC equipment scheduled on drawings.
k) Calibrate thermostats to be within one degree of actual temperature at thermostat.
l) Verify that all HVAC devices operate as scheduled or indicated (i.e. ON-OFF, 2-stage, variable output (SCR heaters), etc.

28) The entire system shall be warranted for a period of one (1) year beginning with Owner's acceptance of the work. Compressors shall include a minimum of five (5) year parts only warranty from the manufacturer. All labor and materials necessary to repair or replace the system or portions thereof, during that time shall be warranted for a period of one (1) year from the repair of replacement.

29) SUBMITTALS AND SUBMITTAL PROCEDURES:

a. Contractor shall review the submittal data and check for the purpose of compliance with safety requirements, verification of dimensions, contract documents and methods and means prior to submitting to design professional. Contractor shall indicate approval by indicating such on the submittal.
b. Transmit each submittal electronically in PDF format.
c. Sequentially number submittal files and transmittal form. Revise submittals with original number and a sequential alphabetic suffix. File names shall describe item included in file.
d. Identify Project, the Contractor, Subcontractor or supplier; pertinent drawing and detail number, and specification section number, as appropriate on each copy. Each file shall include an index of items included in file.
e. Apply the Contractor's stamp, signed or initialed certifying that review, approval, verification of Products required, field dimensions, adjacent construction Work, and coordination of information is in accordance with the requirements of the Work and Contract Documents.
f. Submittal data for all items in project shall be submitted at one time. Submittal shall be divided into groups with file sizes not exceeding 6 MB. If there is unavailable data such as control submittal, etc., these may be submitted later if not doing so would delay project progress. Data shall include capacities, complete installation instructions, dimensional data and electrical data, BHP, motor HP, operating weights and load distribution at mounting points.
g. Deliver submittals electronically to the Design Professional.
h. Schedule submittals to expedite the Project, and coordinate submission of related items.
i. For each submittal for review, allow 15 days excluding delivery time to and from the Contractor.
j. Identify variations from Contract Documents and Product or system limitations that may be detrimental to successful performance of the completed Work.
k. Provide space for the Contractor and the Architect/ review stamps.
l. When revised for resubmission, identify all changes made since previous submission.
m. Distribute copies of reviewed submittals as appropriate. Instruct parties to promptly report any inability to comply with requirements.
n. Submittals not requested will not be recognized or processed.
o. Provide files containing only related items (such as piping, equipment, air distribution, etc.)

30) Instruct Owner's representative in the operation of the systems, using the operation and maintenance manual as a teaching aid.

31) Provide an operation and maintenance manual. As a minimum, the manual shall contain:

a. A complete list of all equipment and appurtenances with equipment designations (per Drawings), manufacturers, and catalog numbers.
b. Copies of manufacturers' brochures and instructions for operation and maintenance of all mechanical equipment, including replacement parts lists.
c. Typed system operation and maintenance instructions, including inspection, lubrication, and service instructions and schedules.
d. List of names, addresses and phone numbers of distributors of all equipment and appurtenances.
e. Manufacturers' warranties.

32) Horizontal Air Handler unit: Indoor fan-coil unit shall be direct-expansion horizontal heat pump air handler with electric strip heat suspended from structure with auxiliary drip pan and condensate drain. Provide float switch in drip pan to shut down unit if pan begins to fill. Unit shall be complete with cooling coil, fan, fan motor, piping connectors, electrical controls, microprocessor control system, and integral temperature sensing. Cabinet shall be fully insulated for improved thermal and acoustic performance. Condensate pan shall have internal trap and auxiliary drip pan under coil header. Provide condensate trap recommended by manufacturer. Air filters shall be 1-inch-thick glass fiber, disposable type arranged for easy replacement. Provide number of stages as scheduled. Provide condensate overflow switch (Rectorseal Safe-T-Switch Model SS1 or equivalent) wired to shut unit down in case of condensate overflow.

33) Vertical Air Handler unit: Indoor fan-coil unit shall be direct-expansion vertical heat pump air handler with electric strip heat mounted on plenum with auxiliary drip pan and condensate drain. Provide float switch in drip pan to shut down unit if pan begins to fill. Unit shall be complete with cooling coil, fan, fan motor, piping connectors, electrical controls, microprocessor control system, and integral temperature sensing. Cabinet shall be fully insulated for improved thermal and acoustic performance. Condensate pan shall have internal trap and auxiliary drip pan under coil header. Provide condensate trap recommended by manufacturer. Air filters shall be 1-inch-thick glass fiber, disposable type arranged for easy replacement. Provide number of stages as scheduled. Provide condensate overflow switch (Rector seal Safe-T-Switch Model SS1 or equivalent) wired to shut unit down in case of condensate overflow.

34) Indoor, direct-expansion, wall-mounted fan coil. Unit shall be complete with cooling/heating coil, fan, fan motor, piping connectors, electrical controls, microprocessor control system, and integral temperature sensing. Unit shall be furnished with integral wall mounting bracket and mounting hardware. Cabinet discharge and inlet grilles shall be attractively styled, high-impact polystyrene. Cabinet shall be fully insulated for improved thermal and acoustic performance. Fan shall be tangential direct-drive blower type with air intake at the top of the unit and discharge at the bottom front. Automatic, motor-driven vertical air sweep shall be provided standard. Air sweep operation shall be user selectable. The vertical sweep may be adjusted (using the remote control) and the horizontal air direction may be set manually. Coil shall be copper tube with aluminum fins and galvanized steel tube sheets. Fins shall be bonded to the tubes by mechanical expansion and golden hydrophilic pre-coated. A drip pan under the coil shall have a drain connection for hose attachment to remove condensate. Condensate pan shall have internal trap. Motors shall be open drip-proof, permanently lubricated ball bearing with inherent overload protection. Fan motors shall be 4-speed. Controls shall consist of a microprocessor-based control system which shall control space temperature, determine optimum fan speed, and run self-diagnostics. The temperature control range shall be from 62°F to 86°F (17°C to 30°C) in increments of 1°F or 1°C, and have 46°F Heating Mode (Heating Setback). The wireless or wired remote controller shall have the ability to act as the temperature sensing location for room comfort. Refer to schedule for preference on wired or wireless thermostat. The unit shall have the following functions as a minimum: An automatic restart after power failure at the same operating conditions as at failure. A timer functions to provide a minimum 24-hour timer cycle for system Auto Start/Stop. Temperature-sensing controls shall sense return air temperature. Indoor coil freeze protection. Wireless infrared remote control and/or wired remote control as scheduled to enter set points and operating conditions. Automatic air sweep control to provide on or off activation of air sweep louvers. Dehumidification mode shall provide increased latent removal capability by modulating system operation and set point temperature. Fan-only operation to provide room air circulation when no cooling is required. Diagnostics shall provide continuous checks of unit operation and warn of possible malfunctions. Error messages shall be displayed at the unit. Fan speed control shall be user-selectable: high, medium, low, or microprocessor controlled automatic operation during all operating modes. Automatic heating-to-cooling changeover in heat pump mode. Control shall include deadband to prevent rapid mode cycling between heating and cooling. Indoor coil high temperature protection shall be provided to detect excessive indoor discharge temperature when unit is in heat pump mode. Unit shall have filter track with factory-supplied cleanable filters. Indoor fan motor to operate on 115V on model size 12 and on 208-230V on model sizes 09-36, as specified. Power is supplied from the outdoor unit. All units should have refrigerant lines that can be oriented to connect from the left, right or back of unit. Both refrigerant lines need to be insulated. The condensate pump shall remove condensate from the drain pan when gravity drainage cannot be used. Pump shall be designed for quiet operation. Pump shall consist of two parts: an internal reservoir/sensor assembly, and a remote sound-shielded pump assembly. A liquid level sensor in the reservoir shall stop cooling operation if the liquid level in the reservoir is unacceptable. Refer to schedule for providing condensate pump. Only provide condensate pump were indicated on schedule.

35) Small Split Condensing unit: Casing: House components in welded steel frame with galvanized steel panels with weather resistant, baked enamel finish. Mount contactors and controls in weatherproof panel provided with full opening access doors. Provide removable access doors or panels with quick fasteners. Compressor: Hermetically sealed, 3600 rpm maximum, resiliently mounted with positive lubrication and internal motor protection. Compressor: Hermetic reciprocating type or Hermetic scroll type. Condenser Coils: Aluminum fins mechanically bonded to seamless copper tubing or all aluminum fins and tube. Air test under water to 425 psig, and vacuum dehydrate. Seal with holding charge of refrigerant. Coil Guard: Louvered or PVC coat steel wire. Fans and motors: Direct driven propeller type condenser fans with fan guard on discharge. Weatherproof motors suitable for outdoor use, single phase permanent split capacitor with permanent lubricated ball bearings and built in thermal overload protection. Fan Guard: PVC coat steel wire. Refrigerant circuit: For each refrigerant circuit, provide: Filter dryer liquid line. Suction accumulator. Suction and liquid line service valves and gage ports. Charging valve. Condenser pressure relief mechanism. Factory wired with single point power connection. Factory wired controls shall include contactor, high- and low-pressure cutouts, internal winding thermostat for compressor, control circuit transformer, non-cycling reset relay. Provide a surge capacitor and lightning arrestor in unit cabinet for protection from power surges due to lightning and switching transients. Provide controls to permit operation down to 0 degrees F ambient temperature were scheduled to include: Crankcase heater with thermostat. Head pressure switch to cycle fan motors in response to refrigerant condensing pressure. Solid state control to vary speed of one condenser fan motor in response to refrigerant condensing pressure. Refer to Schedule on Drawings for additional specifications.

36) Air Source Heat Pumps (HP): outdoor-mounted, air-cooled split system outdoor section suitable for rooftop installation, consisting of a hermetic compressor, an air-cooled coil, propeller-type blow-thru outdoor fans, accumulator, full refrigerant charge (R-410A), and control box. Unit shall function as the outdoor component of an air-to air cooling system and used in a refrigeration circuit matched to the indoor unit. Unit construction shall comply with ANSI/ASHRAE 15, latest revision, the NEC, and UL standards. Provide rail support system compatible with roofing system. Refer to Schedule on Drawings for additional specifications.

37) Provide a duct smoke detector on the supply duct of each air handling unit or rooftop unit with design airflows exceeding 2,000 CFM, and where smaller air handling units have common return ductwork or plenum and total air flow exceeds 2,000 CFM. Install detector in accordance with the International Mechanical Code section 606 Smoke Detection Control System with Georgia Amendments 2018. Detectors shall be provided by the electrical/fire alarm subcontractor and shall be installed by the mechanical subcontractor. For other fans, such as exhaust fans with design airflows exceeding 2,000 CFM, coordinate with the electrical/fire alarm subcontractor to provide room or duct smoke detectors. Where no fire alarm system is installed in building provide smoke detector, audio visual annunciator and trouble indicator in an approved location. Duct smoke detector trouble conditions shall activate a visible or audible signal in an approved location and shall be identified as air duct detector trouble. Provide contacts to automatically shut down all such fan motors when smoke is detected, to indicate detector status to the fire alarm system, and to require a manual reset of the shut-down relay.

38) Fire damper; curtain type with blades outside air stream except when located behind grilles when blades may be in air stream. Provide 1-1/2 hr class unless noted otherwise, vertical or horizontal mounting as shown on drawings with re-placeable, rated, fusible link. Duct-Mounted Access Doors: Provide access doors for access to fire or smoke dampers having fusible links, doors shall be pressure relief access doors; and shall be outward operation for access doors installed upstream from dampers and inward operation for access doors installed downstream from dampers adjacent to and close enough to fire or smoke dampers, to reset or reinstall fusible links. Fabricate access panels according to SMACNA's "HVAC Duct Construction Standards – Metal and Flexible"; Figures 2-10, "Duct Access Doors and Panels," and 2-11, "Access Panels – Round Duct."

39) Grilles, Registers and Diffusers: Grilles, registers, and diffusers as indicated on the drawings have been selected from the catalog of the manufacturer noted as the basis of design. Sizes, types, and performance of the devices to be provided must be coordinated to insure conformity with design basis. Sidewall supply grilles and registers shall have vertical front blades; sidewall return grilles shall have horizontal blades. Grilles and registers with borders shall have felt or rubber gaskets cemented to the back face and holding screws not over 18 inches on centers around the perimeter. Holding screws shall be counter-sunk to fit flush with face of grille or register. Grilles passing air through partitions shall be as described for wall return grilles, one for each side of partition. Register dampers shall be of the gang-operated, opposed blade type, operated through the face of the register. Operating mechanism shall not project through the register face. Mounting frame shall be coordinated with architectural reflected ceiling plans. Construction shall be of steel or aluminum as scheduled, with frame type to match ceiling construction. Sidewall supply grilles and registers shall be double-deflection type, with vertical front vanes. Construction shall be of steel, with 3/4-inch blade spacing. Return air grilles, return air registers, exhaust grilles, exhaust registers and transfer air grilles located in ceilings shall be constructed of aluminum with "egg-crate" design, with 1/2-inch x 1/2-inch x 1/2-inch grids. Frame style shall be compatible with ceiling construction. Install wall grilles and registers with horizontal edges parallel to ceiling. Concentric diffuser assemblies at roof top units shall have paint-ready exterior finish and 1-inch lined supply and return ducts that transition to diffuser size within 24 inches vertically of the bottom of roof top unit curb.

40) Basic motor requirements: basic requirements apply to mechanical equipment motors, unless otherwise indicated. Motors 1/2 hp and larger: Polyphase, unless otherwise scheduled. Motors smaller than 1/2 hp: single phase. Frequency rating: 60 Hz. Service factor: according to NEMA MG 1, general purpose continuous duty, design type "B." Enclosure: open drip-proof, unless otherwise indicated. Efficiency: motors shall have a higher efficiency rating than industry standard average motor as delineated in IEEE Standard 112, test method 13. Thermal protection: where indicated or required, internal protection automatically opens power supply circuit to motor when winding temperature exceeds a safe value calibrated to temperature rating of motor insulation. Thermal protection device automatically resets when motor temperature returns to normal range, unless otherwise indicated.

41) Hangers and supports: Building attachments: concrete inserts or structural-steel fasteners appropriate for building materials, and beam clamps. Hanger materials: galvanized, sheet steel or round, threaded steel rod. Hangers installed in corrosive atmospheres: electrogalvanized, all-thread rod or galvanized rods with threads painted after installation. Straps and rod sizes: comply with SMACNA's "HVAC Duct Construction Standards--Metal and Flexible" for sheet steel width and thickness and for steel rod diameters. Duct attachments: sheet metal screws, blind rivets, or self-tapping metal screws; compatible with duct materials. Trapeze and riser support galvanized steel shapes and plates: steel shapes complying with ASTM A 36/A 36M.

42) Sealant materials: joint and seam sealants, general: the term "sealant" is not limited to materials of adhesive or mastic nature but includes tapes and combinations of open-weave fabric strips and mastics. Joint and seam tape: 2 inches wide; glass-fiber fabric reinforced. Joint and seam sealant: one-part, nonsag, solvent-release-curing, polymerized butyl sealant, formulated with a minimum of 75 percent solids. Flanged joint mastics: one-part, acid-curing, silicone, elastomeric joint sealants, complying with ASTM C 920, type S, grade NS, class 25, use O.

43) Packaged Roof Top Units-Gas Heat: Outdoor packaged units, ground mounted, electrically controlled, 2-stage stage cooling with 2-stage gas heat units, as scheduled, utilizing scroll hermetic compressor(s) for cooling duty and an indirect fired gas furnace section for heating duty. Unit shall discharge supply air vertically. Unit shall exceed ASHRAE 90.1-2001 Energy Standards, be rated in accordance with ARI Standards 210/240 or 360 and 270, in accordance with UL Standard 1995, conform to ASHRAE 15, latest revision, be UL-tested and certified in accordance with ANSI Z21.47 Standards. Factory assembled, single-piece heating and cooling unit. Contained within the unit enclosure shall be all factory wiring, piping, controls, refrigerant charge, and thermal expansion valve. Unit cabinet shall be constructed of galvanized steel, and shall be phosphatized/bonderized and coated with a pre-painted baked enamel finish on all externally exposed surfaces. Coils shall have aluminum fins mechanically bonded to copper tubing. Evaporator fan compartment interior cabinet surfaces shall be insulated with a minimum 1/2-in. thick, 1 lb. density, flexible fiberglass insulation, neoprene coated on the air side. Cabinet insulation shall meet ASHRAE Standard 62P. Aluminum foil-faced fiberglass insulation shall be used in the gas heat compartment. Insulation and adhesive shall meet NFPA 90A requirements for flame spread and smoke generation. Cabinet panels shall be easily removable for servicing. Condenser coils shall have protective wire guards. Unit shall have a factory-installed, sloped condensate drain pan made of a non-corrosive material, with a minimum 3/4-in.-14 NPT connection and shall comply with ASHRAE Standard 62. Unit shall have 2-inch pleated MERV 7 disposable filters a removable, filter access panel to provide filter access. Unit shall have standard thru-the-bottom utility connection capability and accessory powered convenience receptacle. Provide matching pre-fabricated roof curb with direct, duct attachment capability. Provide low- and high-pressure safety switches, anti-short cycle safety, and low ambient operation. Provide microprocessor control panel and complete, factory-wired controls, including discharge air temperature sensor, and communications interface. Refer to schedule for layout basis. Substitutions shall match the features of specified model. Provide condensate overflow switch (Rectorseal Safe-T-Switch Model SS1 or equivalent) wired to shut unit down in case of condensate overflow. Refer to Schedule on Drawings for additional specifications.

44) BI-POLAR IONIZATION DESIGN & PERFORMANCE CRITERIA:

The Bi-polar Ionization system shall be capable of effectively killing microorganisms downstream of the bi-polar ionization equipment (mold, bacteria, virus, etc.). Controlling gas phase contaminants generated from human occupants, building structure and furnishings. Capable of reducing static space charges. Increasing the interior ion levels, both positive and negative, to a minimum of 800 ions/cm³ measured 5 feet from the floor. Self-cleaning requiring no maintenance or replacement parts. Producing a minimum of 160M ions/cc. The bi-polar ionization system shall operate in a manner such that equal amounts of positive and negative ions are produced. Uni-polar ion devices shall not be acceptable.

Velocity Profile: The air purification device shall not have maximum velocity profile.

Humidity: Plasma Generators shall not require preheat protection when the relative humidity of the entering air exceeds 85%. Relative humidity from 0 – 100%, condensing, shall not cause damage, deterioration or dangerous conditions within the air purification system. Air purification system shall be capable of wash down duty.

Equipment Requirements: Electrode Specifications (Bi-polar Ionization): Each Plasma Generator with Bi-polar Ionization output shall include the required number of electrodes and power generators sized to the air handling equipment capacity. A minimum of one electrode pair per 2,400 CFM of air flow shall be provided. Bi-polar ionization tubes manufactured of glass and steel mesh shall not be acceptable due to replacement requirements, maintenance, performance output reduction over time, ozone production and corrosion. Electrodes shall be energized when the main unit disconnect is turned on and the fan is operating. Electrodes shall be made from carbon fiber to prevent oxidation over time. Internal circuitry shall be provided to sense air flow across the electrode output. Ionization systems requiring the use of a mechanical air pressure switch to cycle the electrodes only when the fan is operating shall not be acceptable due to high failure rates and pressure sensitivity. Electrode pair shall provide a minimum of 160 million ions per cubic centimeter as measured at 2 inches, both positive and negative ions, in equal quantities. Devices providing less than 160 million ions/cc per electrode pair shall not be acceptable. Each Plasma Generator shall be provided with a self-cleaning system that is field programmable to change the number of days between the cleaning cycle. Systems without a no-maintenance, self-cleaning system shall not be acceptable. Each electrode pair shall be designed with a banana style plug such that it can be field replaced, if necessary. Each Plasma Generator shall be provided with an inline on/off switch, universal voltage input (24VAC to 240VAC or DC), magnets for mounting to the fan inlet, replaceable carbon fiber emitters and a programmable self-cleaning system.

Air Handler & Plenum Mounted Units (non-ductless mini-split units): Where so indicated on the plans and/or schedules Plasma Generator(s) shall be supplied and installed. The mechanical contractor shall mount the Plasma Generator and wire it to the AHU control power (24VAC) as instructed by the Air Purification Manufacturer's instructions or line voltage subject to power available. Each unit shall be designed with a molded casing, self-cleaning system, self-cleaning test button, power status LED and dry contacts to prove ion output is operating properly. The dry contacts shall close to prove the ion generator is working properly and may be daisy chained in series such that only one dry contact per AHU is required to interface to the BAS or the optional DDC controller. Dry contacts proving power has been applied in lieu of the ion output is actually operating, are not acceptable. Manufacturers providing multiple ion modules that have alarm status wired in parallel, and not in series, shall not be acceptable.

Ionization Requirements: Plasma Generators with Bi-polar ionization output shall be capable of controlling gas phase contaminants and shall be provided for all equipment listed above.

The Bi-polar ionization system shall consist of Bi-Polar Plasma Generator and integral power supply. The Bi-polar system shall be installed where indicated on the plans or specified to be installed. The device shall be capable of being powered by 24VAC to 240VAC without the use of an external transformer. Ionization systems requiring isolation transformers shall not be acceptable.

Ionization Output: The ionization output shall be controlled such that an equal number of positive and negative ions are produced. Imbalanced levels shall not be acceptable.

Ionization output from each electrode shall be a minimum of 160 million ions/cc when tested at 2 from the ionization generator.

All manufacturers shall provide documentation by an independent NELAC accredited laboratory that proves the product has minimum kill rates for the pathogens given the allotted time and in a space condition:

Ozone Generation: The operation of the electrodes or Bi-polar ionization units shall conform to UL 867-2007 with respect to ozone generation. There shall be no ozone generation during any operating condition, with or without airflow.

Control Requirements: All Plasma Generators shall have internal short circuit protection, overload protection, and automatic fault reset circuit breakers. Systems with manual fuses shall not be allowed. Integral airflow sensing shall modulate the Plasma output as the airflow varies or stops. A mechanical airflow switch shall not be acceptable as a means to activate the Plasma device due to high failure rates and possible pressure reversal. The installing contractor shall mount and wire the Plasma device within the air handling unit specified or as shown or the plans. The contractor shall follow all manufacturer IOM instructions during installation. Dry contacts shall be provided to prove there are ions being produced. Systems providing indication that power is applied to the Plasma device, but not directly sensing the power at the ion output, shall not be acceptable.

45) All HVAC equipment such as AH, CU, EF, AC, HP, and RTU shall have visible nameplates with their associated marks on them.

46) Small Split Air Handler unit(4 WAY): The unit shall be a four-way cassette style indoor unit that recesses into the ceiling with a ceiling grille. The indoor unit shall be factory assembled, wired and run tested. Contained within the unit shall be all factory wiring, piping, electronic modulating linear expansion device, control circuit board and fan motor. The unit shall have a self-diagnostic function, 3-minute time delay mechanism, an auto restart function, an emergency operation function and a test run switch. Indoor unit and refrigerant pipes shall be charged with dehydrated air before shipment from the factory. The unit shall be provided with an integral condensate lift mechanism that will be able to raise drain water 19-3/4 inches above the condensate pan. Both refrigerant lines to the indoor units shall be insulated with ½ closed cell foam plastic Armaflex. Refer to Schedule on Drawings for additional specifications.

47) Ceiling Ventilator shall have corrosion resistant galvanized steel housing with four-point mounting capability. It shall be ducted to a cap on wall or roof using round ductwork. Blower assembly shall be removable, have a centrifugal-type blower wheel and a permanently lubricated motor designed for continuous operation. Non-metallic damper/duct connector shall be included. Fan and heater shall be separately controllable. Fan shall contain electric heater Air delivery shall be no less than scheduled and sound level no greater than listed in the schedule. All air and sound ratings shall be certified by HVI.

48) Acceptable Manufacturers are:

Air Handlers & Heat Pumps, Packaged Units:	Carrier, Trane, York, Lennox
Small Split Units:	Mitsubishi, Daikin, Hitachi, Toshiba
Grilles, Registers & Diffusers:	Titus, Nailor, Price, Tuttle & Bailey, Kruger, Metal Aire (Color selection submitted to Architect)
Fans:	Twin-City, Cook, Greenheck, Penn Barry, Acme, American Cool Air, Captive Air, Solar & Palau
Louvers/Dampers/Fire Dampers:	United Enertech, Greenheck, Ruskin, Arrow United, Air Balance
Controls-provided with unit:	Provide thermostats by same manufacturer as equipment

ALPHA BLDG SET 08-27-2024

PHASE 2

Seal: GEORGIA REGISTERED No. PE036004 PROFESSIONAL ENGINEER KRUNAL M PATEL

TOTAL ENGINEERS
169 New Street, Macon, GA 31201
(478)741-4632 - T.E. project # 23-101
www.totalengineers.com

Client: SUNBELT BUILDERS™
10641 HWY 36 COVINGTON GA 30014 t 770 786 0001 770 786 048

Project:
R. L. COUSINS COMMUNITY CENTER
NEWTON CO. BOC RFP #24-04
8134 GEIGER STREET, N.W.
COVINGTON, GEORGIA

Issue Date:	Initial:	Drwg. Revision Description:

Project No.:
Drwg. Date: 04/15/24
Drwg. Revision:
Drawn By: JWK & KMP
Checked By: KMP
File Name:

Sheet Title:
MECHANICAL SPECIFICATIONS

Sheet No.:
M-0.1

PACKAGED ROOFTOP UNIT SCHEDULE

MARK	AIRFLOW	SUPPLY AIR CFM	MIN OUTSIDE AIR CFM	EXT. SP. IN. W.G.	NOMINAL TONS	EVAP. COIL ENTERING AIR DESIGN CONDITIONS		EVAP. COIL LEAVING AIR DESIGN CONDITIONS		SYSTEM COOLING MAX. REQUIREMENTS (MBH)		OUTSIDE AIR TEMP. CONDITIONS	GAS HEAT MBH		HEATING COIL @ OUTSIDE 25F		POWER VAC/PH	BASIS OF DESIGN: CARRIER	WEIGHT LBS	NOTES
						DB F°	WB F°	DB F°	WB F°	TOTAL	SENSIBLE	DB F°	STAGE 1 IN/OUT	STAGE 2 IN/OUT	ENT. TEMP @ STG 1	LEAV. TEMP @ STG 1				
PU-1	HORIZONTAL	4400	550	1.0	12.5	77.3	64.4	55.0	54.0	137.0	99.0	95	120/98	180/148	64.5	85.0	460/3	48FCDN14M3A6-0A0A0	1500	1:2:3:4:5:6:7:8:9:10:11
PU-2	HORIZONTAL	6150	1110	1.0	17.5	78.3	65.3	55.0	54.0	147.5	200.5	95	176/142	220/178	62.0	83.2	460/3	48FCDN20CJA5-8B0A0	2200	1:2:3:4:5:6:7:8:9:10:12

1. PROVIDE FILTERS, CONDENSATE TRAP, PIPING, FLEXIBLE CONNECTIONS. PROGRAMMABLE T-STAT, AND CONDENSATE P-TRAP TO DISCHARGE INTO DRY WELL. HORIZONTAL SUPPLY AND HORIZONTAL RETURN UNIT. UNIT SHALL BE MOUNTED ON CONCRETE PAD.
2. VERIFY ELECTRIC POWER REQUIREMENTS WITH ELECTRICAL PLANS, WHICH TAKE PRECEDENCE OVER THIS INFORMATION.
3. PACKAGED UNIT SHALL HAVE HIGH STATIC MOTOR. PROVIDE MANUFACTURER'S APPROVED SOUND ATTENUATION BLANKETS FOR COMPRESSORS PROVIDE CONDENSER COIL GUARD.
4. PROVIDE MANUFACTURER'S SUPPLY AIR SMOKE DETECTOR. ELECTRICAL SHALL INTERLOCK IT WITH BUILDING FIRE ALARM SYSTEM. PROVIDE MANUFACTURER'S INTEGRAL CONDENSATE OVERFLOW SWITCH.
5. PROVIDE BULT-IN HUMIDI-MIZER ADAPTIVE DEHUMIDIFICATION SYSTEM. HOT GAS REHEAT COIL SYSTEM SHALL WORK INDEPENDENTLY OF COOLING CIRCUIT TO CONTROL HUMIDITY WITHIN OCCUPIED SPACE.
6. PROVIDE MANUFACTURER'S 2-STAGE GAS HEAT. PROVIDE FLUE DISCHARGE DEFLECTOR THAT DEFLECTS FLUE UPWARD. PROVIDE FLUE DISCHARGE HEAT SHIELD.
7. PROVIDE MOTORIZED MINIMUM OUTSIDE AIR HOOD. INTERLOCK MINIMUM OUTSIDE AIR DAMPER TO OPEN WHEN EVAPORATOR FAN IS ON.
8. 2-STAGE COOLING WITH HUMIDI-MIZER. PROVIDE 2-SPEED INDOOR FAN CONTROLLED. FAN SHALL HAVE STAGED AIR VOLUME SYSTEM FOR COOLING.
9. UNDER HEATING SUPPLY CFM SHALL BE SET TO PROVIDE 100% OF AIR AT BOTH STAGES. UNDER COOLING MODE STAGE FAN TO MATCH COOLING STAGE.
10. PROVIDE GLOBAL PLASMA IONIZATION SYSTEM. REFER TO SCHEDULE FOR FURTHER INFORMATION.
11. PROVIDE BASE ECONOMIZER WITH ELECTROMECHANICAL CONTROLS AND FIELD INSTALLED ECONOMIZER ACCESSORIES CREOM2R106A00.
12. PROVIDE TEMPERATURE ECONOMIZER WITH BAROMETRIC RELIEF. BAROMETRIC HOOD SHALL BE FIELD INSTALLED ACCESSORIES.

AIR DEVICE SCHEDULE

MARK	SERVICE	NECK SIZE	FACE SIZE	MATERIAL	TYPE	PATTERN	MOUNTING TYPE	LAYOUT BASIS	NOTES
S1	SUPPLY	SEE PLANS	NECK+2-1/4"	ALUMINUM	AIR NOZZLE	1-WAY	SURFACE	AIR CONCEPTS ANC-RD	4:5
S2	SUPPLY	SEE PLANS	24" X 24"	STEEL	SQUARE CONC.	4-WAY	LAY-IN	TITUS TMS	1:2:4
S3	SUPPLY	SEE PLANS	NECK+1-3/4"	STEEL	DOUBLE DEFLECTION REGISTER	2-WAY	DUCT MOUNT	TITUS 300RS	1
R1	RETURN	SEE PLANS	NECK+1-3/4"	ALUMINUM	FULL LOUVERED FACE	---	SURFACE	TITUS 350RL	3
R2	RETURN	SEE PLANS	24"X24"	ALUMINUM	EGGCRATE	---	SURFACE	TITUS 50F	1:7

1. PROVIDE STANDARD WHITE FINISH.
2. INSULATE BACK OF DEVICE.
3. GRILLE SHALL BE SAME COLOR AS WALL IT IS MOUNTED ON. COORDINATE WITH ARCHITECT.
4. BALANCE AIRFLOW TO QUANTITY SHOWN.
5. CONTRACTOR MUST COORDINATE AIR DEVICE FINISH COLOR WITH ARCHITECT BEFORE PLACING AN ORDER FOR AN AIR DEVICE.
6. PROVIDE OPPOSED BLADE DAMPER(OBD) THAT IS ACCESSIBLE FROM THE FACE OF GRILLE.
7. PROVIDE FULL SIZE LINED ELBOW ON TOP OF GRILL FOR RETURN AIR TRANSFER.
8. PROVIDE FULL SIZE LINED PLENUM ON TOP OF GRILL FOR DUCT CONNECTION.
9. GRILL SHALL BE SAME COLOR AS EXPOSED DUCTWORK. REFER TO ARCHITECTURAL FOR DUCTWORK FINISH.

MECHANICAL SYMBOLS & ABBREVIATIONS LEGEND

	NEW PIPE, DUCTWORK OR EQUIPMENT
24x12 / 24x12	DUCT SIZE: FIRST DIMENSION IS SIDE DRAWN
	FLEXIBLE ROUND DUCTWORK
F, SCD, SD	FIRE DAMPER, SMOKE DAMPER, SMOKE DETECTOR
	CEILING SUPPLY DIFFUSER
	CEILING RETURN OR EXHAUST AIR
	S.A DUCT OUT OF TU BOX WITH DUCT LINER FOR THR FIRST FIVE FEET OF DUCT OUT OF TU BOX
	SIDEWALL REGISTER OR GRILLE
	CHANGE IN PIPE OR DUCT SIZE OR SHAPE
R	REFRIGERANT PIPING
D	CONDENSATE OR OTHER DRAIN PIPING
	ELBOW TURNED DOWN OR TURNED UP IN PIPING
T	THERMOSTAT, ARROW SHOWS CONTROL WIRING PATH
TC	TIME CLOCK
ø	DIAMETER
U.C.	UNDER-CUT DOOR 3/4", UNLESS OTHER SIZE NOTED
20 / E16	INDICATES EQUIPMENT ON PLANS; TOP ITEM SHOWS TYPE OF EQUIPMENT AND BOTTOM ITEM SHOWS SPECIFIC MARK NUMBER
4 S1 8"ø / 300	ITEM IN HEXAGON SHOWS AIR DEVICE MARK NUMBER, ITEM ABOVE LINE SHOWS NECK SIZE, ITEM BELOW LINE SHOWS AIR FLOW THROUGH DEVICE, AND NUMBER IN FRONT SHOWS QUANTITY IF MORE THAN ONE
AFF	ABOVE FINISHED FLOOR
AH	AIR HANDLING UNIT
BD	BYPASS DAMPER
BTUH, MBH	BRITISH THERMAL UNITS, THOUSAND BRITISH THERMAL UNITS
CAP	CAPACITY
CFM	CUBIC FEET PER MINUTE
CLG	CEILING
CU	CONDENSING UNIT
DB, WB	DRY BULB TEMPERATURE, WET BULB TEMPERATURE
EA, EG	EXHAUST AIR, EXHAUST GRILLE
EF	EXHAUST FAN
EXT SP	EXTERNAL STATIC PRESSURE (USUALLY EXPRESSED IN INCHES OF WATER IN GAGE)
HP	HEAT PUMP UNIT
MVD, VD	MANUAL VOLUME DAMPER
OA	OUTSIDE AIR
RA, RG	RETURN AIR, RETURN GRILLE
RTU	PACKAGED ROOFTOP UNIT
SA	SUPPLY AIR
VAC, PH	VOLTS ALTERNATING CURRENT, NUMBER OF PHASES
W, KW	WATTS, KILOWATTS
AD / AD	ACCESS DOOR
	RADIUS ELBOW (R=1.5)
	VANED ELBOW
MOD	MANUAL VOLUME DAMPER (MVD), MOTOR OPERATED DAMPER (MOD)

HEAT PUMP AIR HANDLING UNIT SCHEDULE

MARK	SUPPLY AIR CFM	OUTSIDE AIR CFM	EXT. SP. IN. W.G.	EVAP. FAN HP	EVAP. COIL ENTERING AIR DESIGN CONDITIONS		EVAP. COIL LEAVING AIR DESIGN CONDITIONS		SYSTEM COOLING MAX. REQUIREMENTS (MBH)		SUPPL. HEAT KW	WEIGHT (LBS)	POWER VAC/PH	BASIS OF DESIGN CARRIER	NOTES
					DB °F	WB °F	DB °F	WB °F	TOTAL	SENSIBLE					
AH-1	1,050	120	0.60	1/2	77.1	64.3	55.0	54.0	32.8	25.5	6.8	250	208/3	FV4CNF005L00	1:2:3:4:5:6:7:8:9:10
AH-2	1,050	120	0.60	1/2	77.1	64.3	55.0	54.0	32.8	25.5	6.8	250	208/3	FV4CNF005L00	1:2:3:4:5:6:7:8:9:10

1. UNIT AT 208/1ø AUXILIARY HEATER AT 208/3ø. UNIT SHALL HAVE SINGLE POINT CONNECTION. AIR-HANDLING UNIT WITH ECM MOTOR.
2. VERIFY ELECTRIC POWER REQUIREMENTS WITH ELECTRICAL PLANS, WHICH TAKE PRECEDENCE OVER THIS INFORMATION.
3. PROVIDE AIR FILTERS, DUCT CONNECTIONS AND VIBRATION ISOLATION. PROVIDE PROGRAMMABLE THERMOSTAT AND SUPP. ELEC. HEAT MODULE CONNECTED TO UNIT FOR SINGLE POINT OF CONNECTION.
4. PROVIDE CONDENSATE TRAP(S) AS RECOMMENDED BY MANUFACTURER AND ROUTE CONDENSATE PIPING TO OUTSIDE.
5. PROVIDE AUXILIARY DRAIN PAN UNDER THE AIR HANDLERS WITH FLOAT ACTIVATED SWITCH TO SHUT THE UNIT DOWN INCASE OF CONDENSATE OVERFLOW. REFER TO DETAIL PROVIDED.
6. PROVIDE DUCT SMOKE DETECTOR IN SUPPLY AIR DUCT OF AIR-HANDLING UNIT. PROVIDE A TEST STATION ACCESSIBLE FROM THE FLOOR FOR EACH DETECTOR.
7. FLOAT ACTIVATED CONDENSATE SWITCH SHALL BE PROVIDED AND INSTALLED BY HVAC CONTRACTOR. DUCT SMOKE DETECTORS SHALL BE PROVIDED BY ELECTRICAL CONTRACTOR AND INSTALLED BY HVAC CONTRACTOR.
8. PROVIDE COIL OUTLET SWITCH TO SHUT UNIT DOWN IN CASE OF CONDENSATE OVERFLOW. WIRE COIL OUTLET SWITCH IN SERIES WITH AUXILIARY CONDENSATE SWITCH LOCATED IN DRAIN PAN.
9. PROVIDE 24/7 365 DAY PROGRAMMABLE THERMOSTAT. PROVIDE GLOBAL PLASMA IONIZATION SYSTEM FOR FAN COIL UNIT.
10. PROVIDE GLOBAL PLASMA IONIZATION SYSTEM FOR FAN COIL UNIT.

AIR COOLED HEATPUMP UNIT SCHEDULE

MARK	AHU SERVED	HEAT PUMP HEATING CAP (MBH)	SEER2	HSPF2	NOM. CAP.	REFRIG	OA TEMP SUMMER (DB)	OA TEMP WINTER (DB)	WEIGHT (LBS)	POWER VAC/PH	BASIS OF DESIGN CARRIER	NOTES
HP-1	AH-1	23.8	17.0	8.1	3.0	R410A	96	23	350	208/1	25TPA736A003	1:2:3:4:5:6
HP-2	AH-2	23.8	17.0	8.1	3.0	R410A	96	23	350	208/1	25TPA736A003	1:2:3:4:5:6

1. PROVIDE WITH DEFROST CONTROLS, LOW AMBIENT HEAD PRESSURE CONTROLS, AND ANTI-SHORT CYCLE TIMER. PROVIDE COIL GUARD.
2. VERIFY ELECTRIC POWER REQUIREMENTS WITH ELECTRICAL PLANS, WHICH TAKE PRECEDENCE OVER THIS INFORMATION.
3. PROVIDE LIQUID LINE SOLENOID, CRANKCASE HEATER, TXV, START CAPACITOR AND RELAY AS RECOMMENDED BY MANUFACTURER FOR LONG LINE APPLICATIONS.
4. PROVIDE MOUNTING PAD AS PER DETAIL PROVIDED.
5. 2-STAGE COMPRESSOR UNIT.
6. PROVIDE LONG LINE ACCESSORIES PER NOTE 3 WHERE REFRIGERANT PIPE LENGTHS EXCEEDS 80-EQUIVLENT FEET.

MINI SPLIT SYSTEM SCHEDULE

OUTDOOR UNIT MARK	INDOOR UNIT MARK	MIN COOLING MBH	MIN HEATING MBH @ 47F	SUPPLY AIR CFM	POWER VAC/PH	SEER	HSPF	CARRIER MODEL # OUTDOOR	CARRIER MODEL # INDOOR	SERVES	NOTES
HPU-1	ACU-1	17.5	18.0	680	208/1	20.0	12.5	38MAQB18---3	40MBCQ18---3	C04 COMPUTER ROOM	1:2:3:4:5:6:10:11:12:13
HPU-2	ACU-2	17.5	18.0	680	208/1	20.0	12.5	38MAQB18---3	40MBCQ18---3	C06 WARMING KITCHEN	1:2:3:4:5:6:10:11:12:13
HPU-3	ACU-3	17.5	18.0	680	208/1	19.5	9.6	38MAQB18---3	40MAQB18B--3	C09 A.V/I.D.F	1:2:3:4:5:6:7:8:9:10

1. VERIFY ELECTRICAL POWER REQUIREMENTS WITH ELECTRICAL PLANS WHICH TAKES PRECEDENCE OVER THIS INFORMATION.
2. ROUTE CONDENSATE AS NOTED ON PLANS. COORDINATE WITH PLUMBING.
3. CONDENSATE DRAIN SHALL BE PVC.
4. CONTRACTOR MUST COORDINATE EXACT LOCATION OF DRAIN IN THE FIELD WITH PLUMBING CONTRACTOR. MECHANICAL MUST ROUTE CONDENSATE TO APPROPRIATE LOCATION OF DISPOSAL.
5. PROVIDE DISCONNECT AND ELECTRICAL CONNTECTION TO OUTDOOR UNIT PER MANUFACTURER'S INSTRUCTIONS.
6. PROVIDE MANUFACTURER'S WIRED REMOTE CONTROLLER KSACN0501AAA.
7. PROVIDE RECTOR SEAL SS610E CONDENSATE OVERFLOW SWITCH TO SHUT UNIT DOWN IN CASE OF CONDENSATE OVERFLOW.
8. MINI SPLIT SYSTEM MOUNTED ON WALL (SEE PLANS). PROVIDE MANUFACTURER'S WIRED THERMOSTAT.
9. PROVIDE FLOAT ACTIVATED CONDENSATE PUMP TO PUMP CONDENSATE DOWN TO DRAIN. PUMP SHALL BE INTEGRAL TO THE UNIT CABINET.
10. PROVIDE RECTOR SEAL SS610E CONDENSATE OVERFLOW SWITCH TO SHUT UNIT DOWN IN CASE OF CONDENSATE OVERFLOW.
11. 4-WAY CEILING CASSETTE.
12. PROVIDE MANUFACTURER'S INTEGRAL CONDENSATE PUMP.
13. PROVIDE SELF CLEANING IONIZATION SYSTEM. REFER TO SCHEDULE FOR FURTHER INFORMATION.

FAN SCHEDULE

MARK	CFM	EXT. SP IN W.G.	DRIVE TYPE	MOTOR AMP/WATTS /HP	MAX SONES	POWER/ PHASE	SERVES	BASIS OF DESIGN	NOTES
EF-1	200	0.20	DIRECT	172.0	4.5	115/1	C13 WOMEN	GREENHECK SP-B200	1:2:3:4
EF-2	200	0.20	DIRECT	172.0	4.5	115/1	C12 MEN	GREENHECK SP-B200	1:2:3:4
EF-3	70	0.25	DIRECT	20.0 W	1.3	115/1	C06 KITCHEN	GREENHECK SP-B90	1:2:3:5
EF-4	70	0.25	DIRECT	20.0 W	1.3	115/1	C07 JAN CLOS	GREENHECK SP-B90	1:2:3:5
EF-5	150	0.30	DIRECT	128.0	3.6	115/1	C08 HVAC/ELECTRIC	GREENHECK SP-B150	1:2:3:6

1. CEILING MOUNTED CENTRIFUGAL FAN. PROVIDE FACTORY SUPPLIED DISCONNECT SWITCH, BACKDRAFT DAMPER, VIBRATION ISOLATION, FAN SPEED CONTROLLER, GRILLE AND MOTOR WITH THERMAL OVERLOAD.
2. PROVIDE ROUND DUCT CONNECTION.
3. VERIFY ELECTRIC POWER REQUIREMENTS WITH ELECTRICAL PLANS, WHICH TAKE PRECEDENCE OVER THIS INFORMATION.
4. FAN SHALL BE CONTROLLED BY A 24/7 365 DAY TIME CLOCK LOCATED IN C07 JANITOR CLOSET. ELECTRICAL SHALL PROVIDE TIME CLOCK.
5. FAN SHALL BE CONTROLLED BY A SWITCH LOCATED IN ROOM IT SERVES.
6. FAN SHALL BE CONTROLLED BY A LINE VOLTAGE THERMOSTAT LOCATED IN ROOM FAN SERVES. THERMOSTAT SHALL BE PROVIDED BY MECHANICAL.

SELF-CLEANING IONIZATION SYSTEM SCHEDULE

AIRFLOW CAPACITY MIN-MAX CFM	BASIS OF DESIGN GLOBAL PLASMA SOLUTIONS	NOTES
0-2400	GPS-FC24-AC	1:2:3:4:5
0-1200	GPS-FC	1:6:7:8
0-8000	GPS-IMOD	1:2:3:4:9

1. INTERLOCK IONIZATION SYSTEM TO RUN WITH EVAPORATOR FAN.
2. UNIT SHALL BE EQUIPPED WITH UNIVERSAL VOLTAGE INPUT, IN-LINE ON-OFF SWITCH, PROGRAMMABLE AUTO-CLEANING CYCLE.
3. UNIT SHALL BE EQUIPPED WITH PLASMA ON INDICATION LIGHT, ALARM CONTACTS, MAGNETS, AND CARBON FIBER BRUSH EMITTERS.
4. SYSTEM SHALL BE INSTALLED PER MANUFACTURER'S INSTRUCTIONS.
5. ONE IONIZATION SYSTEM PER DUCTED FAN COIL UNIT.
6. ONE SELF CLEANING IONIZATION SYSTEM SHALL BE INSTALLED PER DUCTLESS MINI SPLIT UNIT.
7. SYSTEM SHALL BE USE FOR DUCTLESS MINI SPLITS.
8. SYSTEM SHALL BE EQUIPPED WITH CARBON FIBER BRUSHES AND LED OPERATION STATUS.
9. ONE IONIZATION SYSTEM PER PACKAGED UNIT(PU-1 & PU-2) OVER 2400 CFM.

ALPHA BLDG SET 08-27-2024

PHASE 2

Seal: GEORGIA REGISTERED PROFESSIONAL ENGINEER KRUNAL M PATEL

TOTAL ENGINEERS
169 New Street, Macon, GA 31201
(478)741-4632 - T.E. project # 23-101
www.totalengineers.com

Client: SUNBELT BUILDERS™
10841 HWY 8 COVINGTON GA 30014 1 770 788 0 1 770 788 046

Project: R. L. COUSINS COMMUNITY CENTER
NEWTON CO. BOC RFP #24-04
8134 GEIGER STREET, N.W.
COVINGTON, GEORGIA

Issue Date:	Initial:	Drwg. Revision Description:

Project No.:
Drwg. Date: 04/15/24
Drwg. Revision:
Drawn By: JWK & KMP
Checked By: KMP
File Name:

Sheet Title: *MECHANICAL SCHEDULES*

Sheet No.: M-0.2

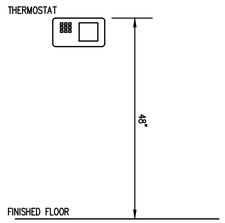

1 T-STAT DETAIL
SCALE: N.T.S.

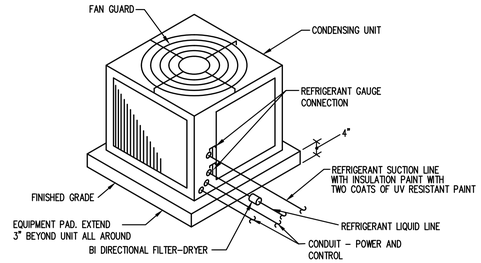

NOTE: 1) THIS DETAIL IS FOR HEAT PUMP UNIT 5 TONS AND UNDER
2) PROVIDE 4"X4"WELDED WIRE MESH REINFORCING AT CENTER LINE FOR THE CONCRETE PAD.
3) PAD MAY BE PREFABRICATED DIVERSITECH ULTRALITE EQUIPMENT PAD OR EQUIVALENT.

2 AIRCOOLED CONDENSING UNIT SLAB MOUNTED
SCALE: N.T.S.

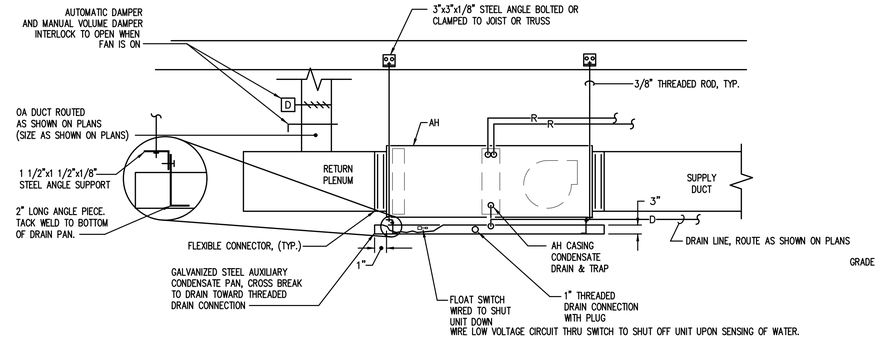

3 AHU WITH AU ILIAR CONDENSATE PAN
SCALE: N.T.S.

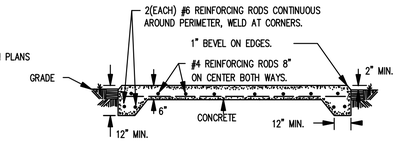

4 E TERIOR BASE OR GROUND MOUNTEE PACKAGED UNIT DETAIL
SCALE: N.T.S.

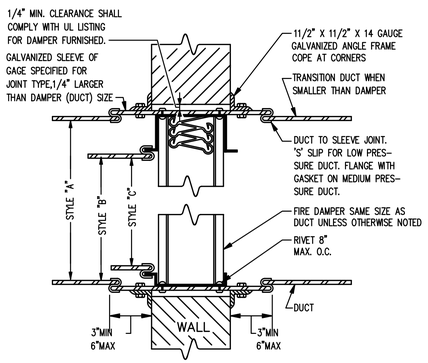

VERTICAL FIRE DAMPER

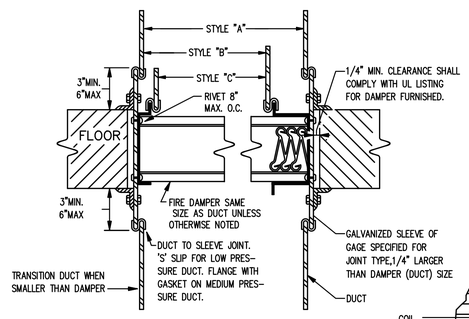

HORIZONTAL FIRE DAMPER

ALL FIRE DAMPERS ON THE PROJECT SHALL BE STYLE 'A' TYPE FIRE DAMPERS UNLESS OTHERWISE NOTED. DAMPERS LOCATED IN MEDIUM OR HIGH PRESSURE DUCTWORK SHALL BE STYLE 'C' FIRE DAMPERS. WHERE DAMPERS ARE INSTALLED IN DRYWALL PARTITION, STUD FRAMING SHALL BE PROVIDED ON ALL FOUR SIDES ON DAMPER.

IRE DAMPER DETAIL
SCALE: N.T.S.

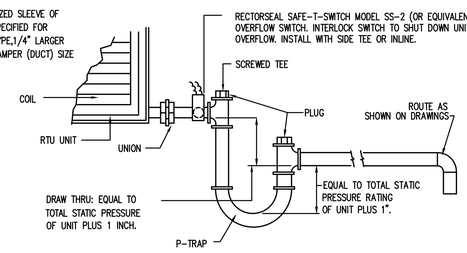

CONDENSATE DRAIN DETAIL
SCALE: N.T.S.

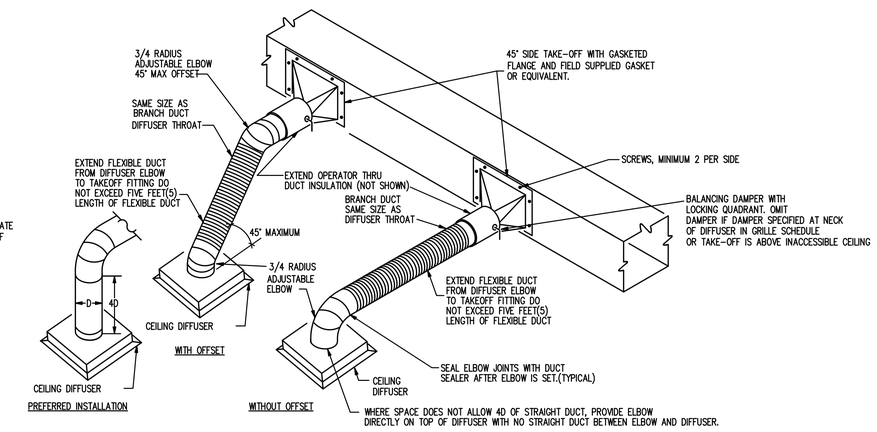

7 DI USER RUN OUT DETAIL
SCALE: N.T.S.

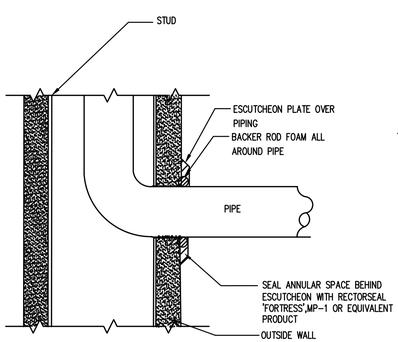

CONDENSATE PIPE SLEE E THROUGH WALL DETAIL
SCALE: N.T.S.

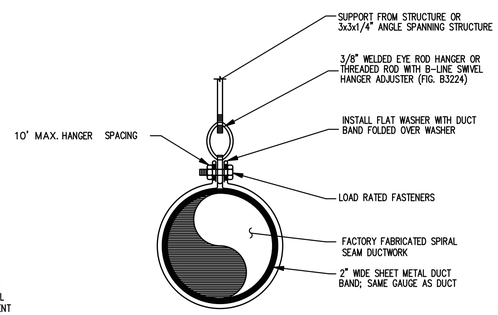

DUCT SUPPORT IN E POSED AREA
SCALE: N.T.S.

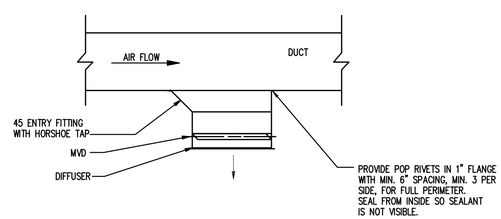

10 DUCT MOUNTED DI USER DETAIL
SCALE: N.T.S.

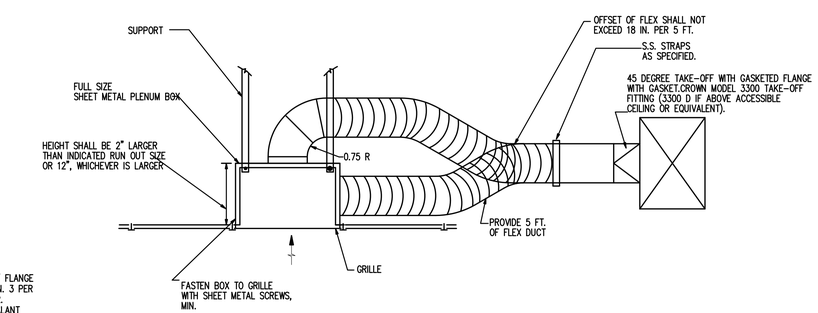

11 T PICAL GRILLE WITH LINED PLENUM DETAIL
SCALE: N.T.S.

ALPHA BLDG SET 08-27-2024

PHASE 2

Seal: GEORGIA REGISTERED No. PE025683 PROFESSIONAL ENGINEER KRUNAL M PATEL

TOTAL ENGINEERS
169 New Street, Macon, GA 31201
(478)741-4632 - T.E. project #23-101
www.totalengineers.com

Client: SUNBELT BUILDERS™
10841 HWY 8 COVINGTON GA 30014 t.770.788.0.1 770.788.048

Project: R. L. COUSINS COMMUNITY CENTER
NEWTON CO. BOC RFP #24-04
8134 GEIGER STREET, N.W.
COVINGTON, GEORGIA

Issue Date:	Initial:	Drwg. Revision Description:

Project No.:
Drwg. Date: 04/15/24
Drwg. Revision:
Drawn By: JWK & KMP
Checked By: KMP
File Name:

Sheet Title: *MECHANICAL DETAILS*

Sheet No.: M-0.3

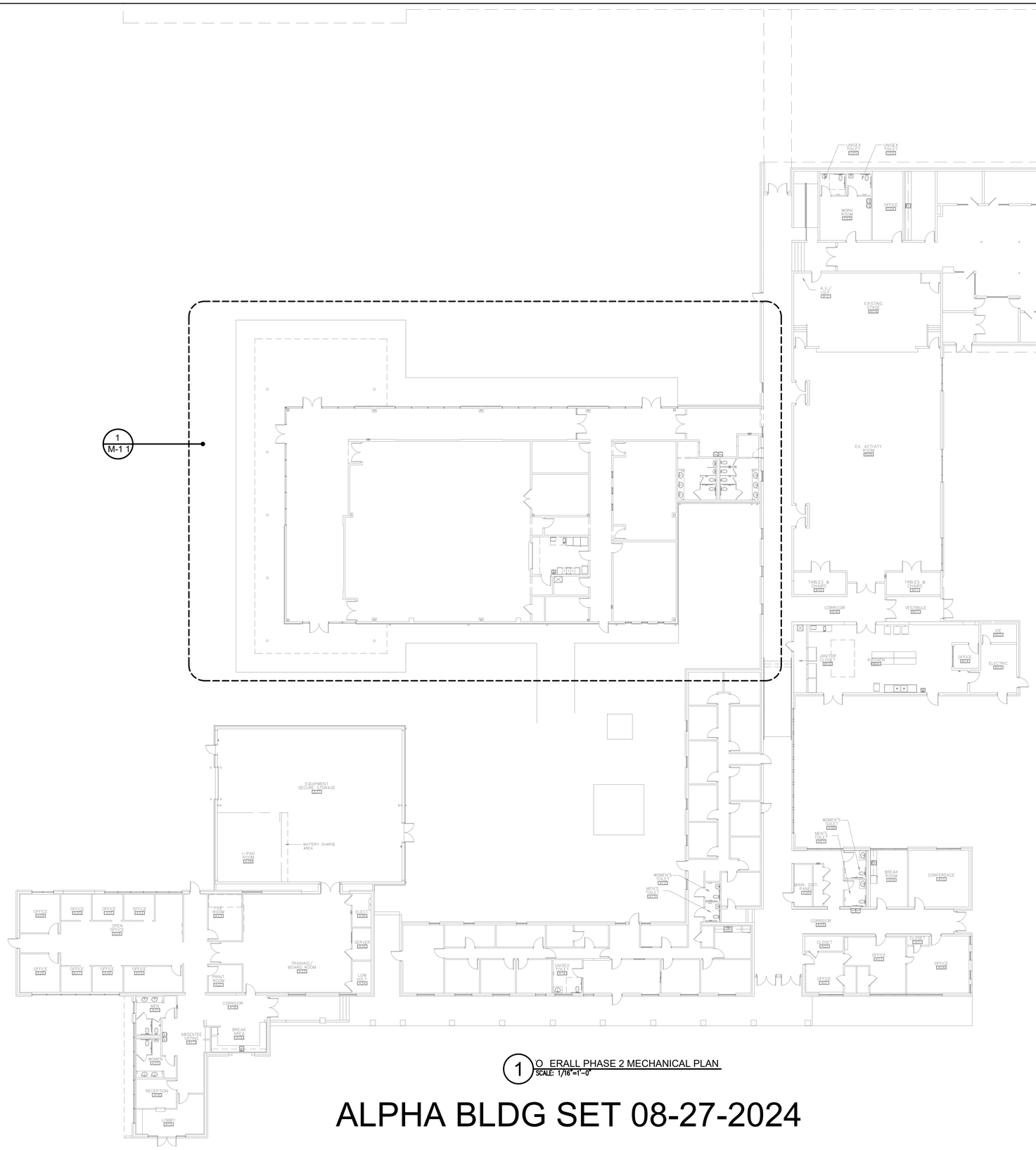

1 O ERALL PHASE 2 MECHANICAL PLAN
SCALE: 1/16"=1'-0"

ALPHA BLDG SET 08-27-2024

PHASE 2

Seal:

GEORGIA REGISTERED No. 34666664 PROFESSIONAL ENGINEER KRUNAL M PATEL

TOTAL ENGINEERS
169 New Street, Macon, GA 31201
(478)741-4632 - T.E. project # 23-101
www.totalengineers.com

Client:

SUNBELT BUILDERS™
10041 HWY 8 COVINGTON GA 30014 : 770.788.0 1 770.788 0 48

Project:

R. L. COUSINS COMMUNITY CENTER
NEWTON CO. BOC RFP #24-04
8134 GEIGER STREET, N.W.
COVINGTON, GEORGIA

Issue Date:	Initial:	Drwg. Revision Description:

Project No.:
Drwg. Date: 04/15/24
Drwg. Revision:
Drawn By: JWK & KMP
Checked By: KMP
File Name:

Sheet Title:
OVERALL MECHANICAL PLAN

Sheet No.:
M-1.0

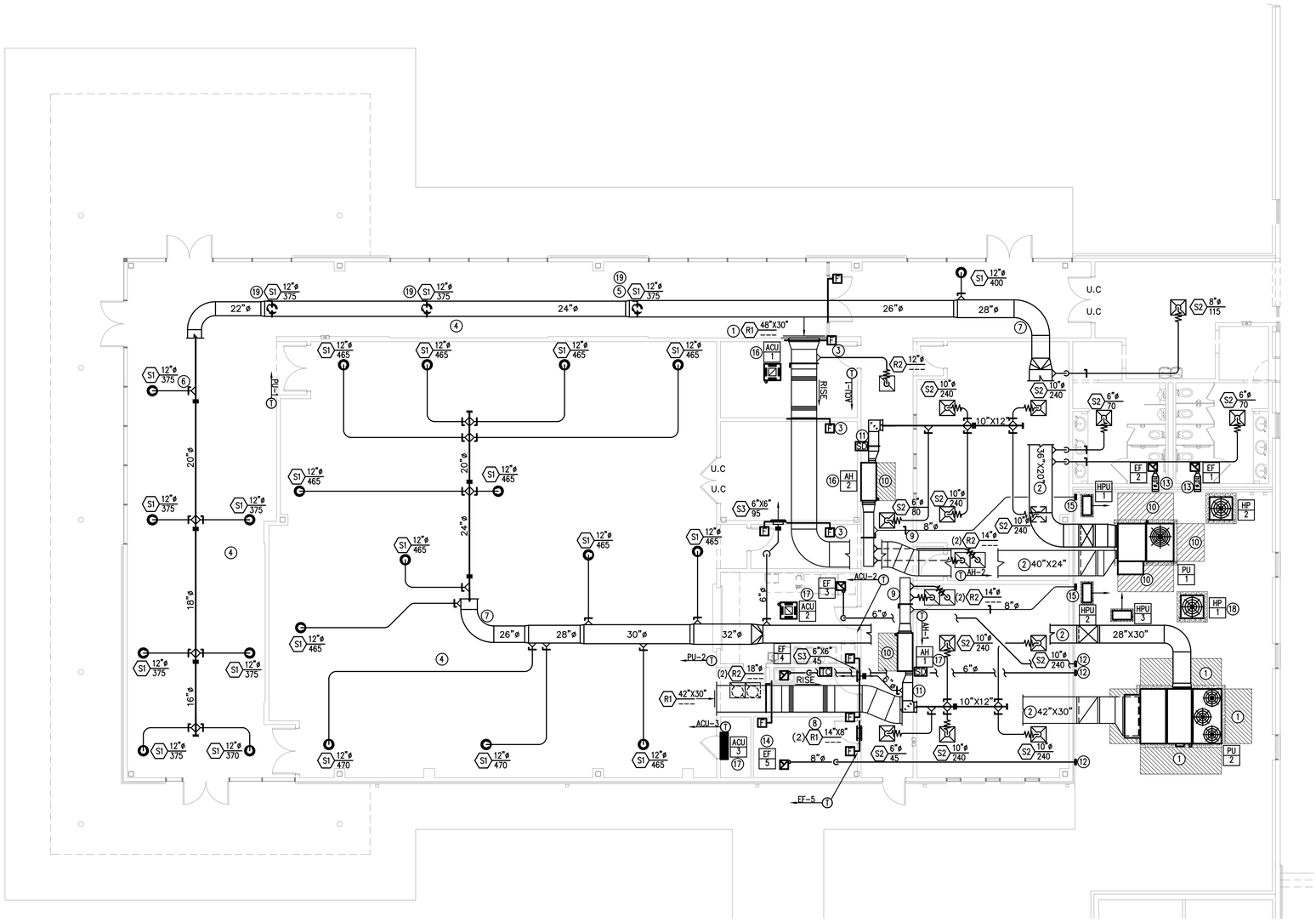

1 ENLARGED COMMUNIT BUILDING MECHANICAL PLAN
SCALE: 1/8"=1'-0"

KEY NOTES(THIS SHEET ONLY):

1. BOTTOM OF SIDEWALL RETURN AIR GRILL SHALL BE AT SAME ELEVATION AS TOP OF LAY IN CEILING IN THE C04 COMPUTER ROOM.
2. TOP OF DUCT AT BOTTOM OF STRUCTURE.
3. CONTRACTOR SHALL OMIT FIRE DAMPER IN CASE WALL IS NT RATED. CONTRACTOR SHALL CHECK RATING OF THE WALL WITH ARCHITECTURAL LIFE SAFETY PLAN BEFORE INSTALLING FIRE DAMPER. TYPICAL FOR ALL FIRE DAMPERS.
4. ALL VISIBLE EXPOSED DUCTWORK WITHIN BUILDING SHALL BE SPIRAL DUCTWORK. PROVIDE PAINT GRILL FINISH. NON-VISIBLE DUCTWORK SHALL BE WRAP WITH INSULATION PER SPECIFICATIONS.CONTRACTOR SHALL PAINT PER OWNER/ARCHITECTURAL.
5. GRILL ELEVATION SHALL BE SAME AS LOWEST NEARBY ROUND/RECTANGULAR CLOUD. GRILL SHALL BE SAME COLOR AS VISIBLE EXPOSED SPIRAL DUCTWORK. TYPICAL FOR ALL AIR-NOZZLE(S1) DIFFUSERS. CONTRACTOR SHALL EXACTLY COORDINATE WITH GC AND ARCHITECTURAL.
6. TYPICAL YOUNG REGULATOR MODEL 270-896-LO CONCEALED CEILING REGULATOR WITH 7/8" THREADED CEILING CAP. PROVIDE BOWDEN CASING WIRE AS REQUIRED. CONTRACTOR SHALL FOLLOW MANUFACTURER'S INSTRUCTIONS FOR INSTALLING MANUAL VOLUME REGULATORS. CONTRACTOR SHALL USE YOUNG REGULATOR FOR DAMPERS LOCATED ABOVE HARD GYP BOARD INACCESSIBLE CEILING. PROVIDE REGULAR MVD WHERE DAMPER IS ACCESSIBLE.
7. PROVIDE INTERNALLY LINED DOUBLE WALL SPIRAL DUCT ELBOW.
8. BOTTOM OF GRILL AT TOP OF A DOOR.
9. 16"X16" RETURN AIR DUCT.
10. UNIT ACCESS SPACE.
11. 14"X14" SUPPLY AIR DUCT.
12. EXHAUST AIR CAP. TOP OF CAP AT BOTTOM OF STRUCTURE.
13. 10"ø EXHAUST AIR WALL CAP.
14. ALL EXHAUST AIR DUCT SHALL BE HARD SHEET METAL DUCTWORK MINIMUM 26-GAUGE TO OMIT FIRE DAMPER. REFER TO FIRE DAMPER COMMISSION DETAIL. TYPICAL FOR ALL EXHAUST AIR DUCTWORK.
15. 8"ø OUTSIDE AIR WALL CAP DOWN LOW. CAP SHALL BE AT SAME ELEVATION AS AIR-HANDLING UNIT.
16. ROUTE CONDENSATE DRAIN TO MECHANICAL YARD. PROVIDE 45-DEGREES ELBOW AT DISCHARGE TO GUIDE CONDENSATE AWAY FROM EXTERIOR WALL. PROVIDE SPLASH BLOCK AT DISCHARGE.
17. ROUTE CONDENSATE TO MOP SINK AT JANITOR CLOSET.
18. ROUTE REFRIGERANT PIPES TO RESPECTIVE AIR-HANDLING UNIT LOCATED INSIDE BUILDING. ROUTE AND SIZE PER MANUFACTURER'S INSTRUCTIONS.
19. CONTRACTOR SHALL TAKE A TAP FROM UNDER THE SPIRAL DUCT. PROVIDE MVD AT TAP.

ALPHA BLDG SET 08-27-2024

PHASE 2

Seal: GEORGIA REGISTERED PROFESSIONAL ENGINEER KRUNAL M PATEL

TOTAL ENGINEERS
169 New Street, Macon, GA 31201
(478)741-4632 - T.E. project # 23-101
www.totalengineers.com

Client: sunbelt BUILDERS™
10841 HWY 8 COVINGTON GA 30014 1770788 01 770788 046

Project:
R. L. COUSINS COMMUNITY CENTER
NEWTON CO. BOC RFP #24-04
8134 GEIGER STREET, N.W.
COVINGTON, GEORGIA

Issue Date:	Initial:	Drwg. Revision Description:

Project No.:
Drwg. Date: 04/15/24
Drwg. Revision:
Drawn By: JWK & KMP
Checked By: KMP
File Name:

Sheet Title:
ENLARGED COMMUNITY BLDG MECHANICAL PLAN

Sheet No.:
M-1.1

PLUMBING SPECI ICATIONS

Provide all plumbing items indicated on the drawings, described herein or otherwise required for a complete and proper installation, including:
A. Plumbing fixtures, fittings and equipment.
B. Hot and cold water systems.
C. Drain waste and vent piping systems.
D. Indirect waste piping, including all valves, traps, piping and accessories for all equipment. Size per equipment requirements.

Comply with all applicable codes, standards and ordinances, including requirements of the Georgia State Minimum Standard Plumbing Code (2018 International Plumbing Code with all Georgia State Amendments), Georgia State Minimum Standard Energy Code (2015 International Energy Conservation Code with all Georgia State supplements and Amendments), and the DOJ 2010 ADA Standards for Accessible Design with Georgia Amendments of Rule 120-3-20.

The contractor should not attempt to precisely scale dimensions from these drawings to obtain construction dimensions and clearance. The contractor shall verify all actual dimensions and clearances. Although these plans are diagrammatic in nature, they shall be followed as closely as site conditions, new construction, and work by other trades shall permit. Deviations from these drawings, which are required to conform to the available space or to actual building construction, shall be made at no additional cost to the owner.

The submission of a bid or proposal will be construed as evidence that the contractor has familiarized himself with the plans and building site. Claims made subsequent to the proposal for materials and/or labor due to difficulties encountered will not be recognized unless these difficulties could not have been foreseen, even though proper examination had been made.

Fabrication or ordering of any material or equipment prior to verification of site conditions shall be done at the contractor's risk.

All equipment and material shall be new and of first quality. Equipment and material shall be the same or equal to the basis of design listed on these drawings.

Coordinate with all trades and verify all equipment rough-in items and locations with the equipment supplier or contractor. All re-work and corrections required due to lack of coordination shall be the contractor's responsibility, and done at no cost to the owner.

Submit shop drawings and material data submittals to the engineer for approval before installation. No substitutions shall be allowed without prior approval by the engineer. Product data for piping, insulation, valves, specialties and all fixtures and equipment scheduled and specified here. For each submittal for review, allow 15 days excluding delivery time to and from the Contractor.

All equipment and flue materials shall be U.L. listed.

Installation shall comply with manufacturer requirements including all clearances recommended for proper operation of service. All serviceable parts shall be readily accessible.

Below ground sanitary drain and vent piping shall be solid-wall ASTM D2665 schedule 40 PVC. Install underground, PVC plastic drainage piping according to ASTM D2321. Above ground sanitary drain and vent piping shall be cellular-core ASTM F891 schedule 40 PVC. Install aboveground PVC piping according to ASTM D 2665. All aboveground piping shall be adequately supported. Sanitary drain and vent piping shall have PVC Socket Fittings (ASTM D 2665, made to ASTM D 3311, drain, waste, and vent patterns and to fit Schedule 40 pipe). Slope at 1/8 inch per foot continuously toward public sewer.

Insulate aboveground floor drains, traps, and sanitary drain piping within 10 feet of drain receiving condensate and equipment drain water below 60° with 1" thick type i performed glass-fiber pipe insulation, 1-1/2" cellular glass, or 1" flexible elestomeric.

All above ground domestic water distribution piping shall be ASTM D 2846, SDR11, schedule 40 CPVC with socket fittings. All piping shall be adequately supported. Disinfect all domestic water piping after installation. All underground domestic water distribution piping 1" and smaller shall be ASTM D 876 & ASTM F 877 PEX with no fittings underground. All underground domestic water distribution piping 1-1/4" and larger shall be ASTM D 1785 schedule 40 PVC with ASTM D 2466 PVC socket fittings.

DOMESTIC WATER PIPING CLEANING

A. Clean and disinfect potable domestic water piping as follows:
   1. Purge new piping and parts of existing piping that have been altered, extended, or repaired before using.
   2. Use purging and disinfecting procedures prescribed by authorities having jurisdiction; if methods are not prescribed, use procedures described in either AWWA C651 or AWWA C652 or follow procedures described below:
      a. Flush piping system with clean, potable water until dirty water does not appear at outlets.
      b. Fill and isolate system according to either of the following:
         1) Fill system or part thereof with water/chlorine solution with at least 50 ppm (50 mg/L) of chlorine. Isolate with valves and allow to stand for 24 hours.
         2) Fill system or part thereof with water/chlorine solution with at least 200 ppm (200 mg/L) of chlorine. Isolate and allow to stand for three hours.
      c. Flush system with clean, potable water until no chlorine is in water coming from system after the standing time.
      d. Repeat procedures if biological examination shows contamination.
      e. Submit water samples in sterile bottles to authorities having jurisdiction.
B. Prepare and submit reports of purging and disinfecting activities. Include copies of water-sample approvals from authorities having jurisdiction.
C. Clean interior of domestic water piping system. Remove dirt and debris as work progresses.

Domestic water piping shall be insulated with Owens Corning type ASJ/SSL-II heavy density fiber glass with all service jacket. Insulation shall have a flame spread rating not to exceed 25 and a smoke density not to exceed 50 when tested in accordance with U.B.C. standard 42-1. Provide mastic on all joints and exposed ends of insulation. Insulate domestic Cold water piping in unconditioned spaces such as exterior corridors, attic, basements, etc with 1/2" thick insulation for piping 1-1/4" & smaller and 1" thick insulation for piping 1-1/2" & larger. Insulate all domestic Hot water supply and return piping with 1" thick insulation for piping 1-1/4" & smaller and 1-1/2" thick insulation for piping 1-1/2" & larger.

Above ground natural gas piping shall be ASTM A53; Type E or S; Grade B; Schedule 40; black steel with malleable iron threaded fitting per ASME 16.3 Class 150. Flexible connectors shall comply be ANSI Z21.24 of copper alloy. Gas stops shall have bronze body with AGA stamp and bronze plug with lever handle. Valves shall be ASME B16.33 with IAS-listed bronze body. Coordinate connection of gas service and installation of meter with gas utility company. All piping shall be adequately supported. Prime & paint all exposed outdoor piping. Line gas pressure regulators shall comply with ANSI Z21.80. Appliance gas pressure regulators shall comply with ANSI Z21.18. Provide vent limiting device for regulators located indoors. Provide vent protector device for regulators located outdoors.

HW & CW Valves: Use pipe size valves, as shown below:
A. Ball: Watts LFFBV-3C.
B. Check: Watts #600 or #601S.

Fixture tailpieces, wall escutcheon, and traps for lavatories and sinks shall be brass tubing, semi-cast, or cast iron: All brass tubing shall be 17 gage, chrome plated. Exception: If the fixture tailpieces and traps are located in cabinets, the tailpiece & trap shall be PVC. Grid drains for public lavatories. Basket strainers for break room sinks.

Water Hammer Arresters shall comply with standard ASSE 1010, metal bellows type or copper piston type.

Urinal Supports shall be type I, urinal carrier with fixture support plates and coupling with seal and fixture bolts and hardware matching fixture for wall-mounting, urinal-type fixture. Include steel uprights with feet. For accessible-fixture support include rectangular steel uprights. Lavatory Supports shall be type II, lavatory carrier with concealed arms and tie rod for wall-mounting, lavatory-type fixture. Include steel uprights with feet. For accessible-fixture support include rectangular steel uprights. Plate type wall hangers for water coolers.

Lavatory/ Sink supply fittings: NSF Standard: Comply with NSF/ANSI 61 Annex G, "Drinking Water System Components – Health Effects," for supply-fitting materials that will be in contact with potable water. Standard: ASME A112.18.1/CSA B125.1. Supply Stops: Chrome-plated-brass, one-quarter-turn, ball-type valve with inlet connection matching supply piping. Wheel handle operation. Risers: Chrome-plated, soft-copper flexible tube for exposed applications and ASME A112.18.6, braided- or corrugated-stainless-steel, flexible hose for conceal behind cabinet applications.

Provide ADA Supply and Drain Protective Shielding Guards on ADA fixtures that piping is exposed. Supply and Drain Protective Shielding Guards shall comply with ICC A117.1 and Americans with Disabilities Act (ADA) requirements. Manufactured plastic wraps shall cover hot and cold water supplies, trap, and drain piping.

All pipe hangers, clamps and channels shall be adequately sized to carry pipe loads and prevent sagging.

All other materials not specifically described but required for a complete and proper installation of work of this section, shall be new, first quality of their respective kinds, and as selected by the contractor subject to acceptance by the engineer.

Lay out the plumbing system in careful coordination with the drawings, determining proper elevations for all components of the system and using only the minimum number of bends to produce a satisfactorily functioning system. Follow the general layout shown on the drawings in all cases except where other work may interfere. Unless shown otherwise, lay out all pipes to fall within partition, wall floor, or roof cavities, and to not require furring other than as shown on the drawings.

Do not cut into or reduce the size of any load-carrying member without the prior approval of the architect. Install all pipes to clear all beams and obstructions.

Extend all plumbing vents above roof to parapet height.

Permanently close and make weatherproof any openings or penetrations of the building envelope made for plumbing systems. All wall and floor penetrations shall be sleeved. All exterior wall or foundation wall penetrations shall use a mechanical seal.

Coordinate all roof penetrations with architectural plans and building and roofing trades.

Provide shut-off balls valves and unions at all water connections to equipment and appliances.

Isolate all dissimilar metals with "EPCO" dielectric unions, except for brass or bronze valves with steel pipe.

Protect the potable water supply against backflow and siphonage from equipment, fixtures, etc., using approved backflow and anti-siphon devices.

Thoroughly clean all piping and equipment. Removing all dirt, rust, oil, and plaster.

Test Sanitary drainage piping by plugging all openings and filling with water to a height equal to a 10 foot head. Allow to stand one hour or longer as required. Repair leaking joints and then re-test.

No work shall be covered until it has been inspected and accepted by the local authority and the engineer.

Domestic water piping tests: Fill domestic water piping. Check components to determine that they are not air bound and that piping is full of water. Test for leaks and defects in new piping and parts of existing piping that have been altered, extended, or repaired. Leave new, altered, extended, or replaced domestic water piping uncovered and unconcealed until it has been tested and approved. Expose work that was covered or concealed before it was tested. Cap and subject piping to static water pressure of 50 psig (345 kPa) above operating pressure, without exceeding pressure rating of piping system materials. Isolate test source and allow it to stand for four hours. Leaks and loss in test pressure constitute defects that must be repaired. Repair leaks and defects with new materials, and retest piping or portion thereof until satisfactory results are obtained.

The entire system shall be warranted for a period of one (1) year beginning with Owner's acceptance of the work. All labor and materials necessary to repair or replace the system, or portions thereof, during that time shall be warranted for a period of one (1) year from the repair or replacement.

Install piping in concealed locations, unless otherwise indicated and except in equipment rooms, and service areas. Install piping indicated to be exposed and piping in equipment rooms and service areas at right angles or parallel to building walls. Diagonal runs are prohibited unless specifically indicated otherwise. Install piping above accessible ceilings to allow sufficient space for ceiling panel removal. Install piping to permit valve servicing. Install piping at indicated slopes. Install piping free of sags and bends. Install fittings for changes in direction and branch connections. Install piping to allow application of insulation. Select system components with pressure rating equal to or greater than system operating pressure. Install escutcheons for penetrations of walls, ceilings, and floors. Verify final equipment locations for roughing-in.

Confirm that millwork is constructed with adequate provision for the installation of counter top lavatories and sinks.

Seal fixtures to wall and floor surfaces with sealant, color to match fixture.

All vents thru roof (VTR) shall be offset a minimum of 10'-0" from all outside air intakes.

Provide Plastic Pipe Markers on all aboveground plumbing piping that Comply with ASME A13.1. Minimum information indicating flow direction arrow and identification of fluid being conveyed. Install labeling on pipe at intervals of not more than 20 feet and at least once in each room.

Provide a complete through penetration fire stopping assembly for fire resistance rated wall assemblies. The through penetration assembly must be listed by an approved third-party test agency (UL), and include the entire listed assembly with all notations. Refer to architectural drawings for fire wall locations.

Approved manufactures: (Items submitted shall be approved by architect and engineer. Architect and engineer reserve the right to reject any item substituted for basis of design item for any reason.)

China Fixtures: American Standard, Kohler, Toto, Zurn, Sloan
Faucets: Delta, T&S Brass, Chicago Faucets, Zurn, Kohler, Grohe, Moen, Speakman, Symmons
Supplies & Traps: Engineered Brass CO., Mcguire, Charlotte Pipe, Brasscraft, IPS, Watts, Zurn
Flush Valves: Sloan, Delany, Zurn, American Standard
Floor Drains & Cleanouts: Zurn, Jay R Smith, Proset, Watts, Mifab, Wade, Josam, Sioux Chief, Oatey
Water Heaters: A.O. Smith, Lochinar, Bradford White, State, Rheem
Toilet Seats: Bemis, Centoco, Church Seats, Olsonite, Beneke, Zurn, Mainline
ADA Protective Shielding Pipe Covers: Engineered Brass, McGuire, Plumberex, TRUEBRO, Zurn, Oatey
Fixture Supports: MIFAB, Jay R. Smith, Wade, Watts, Zurn
Wall Hydrants/ Hose Bibbs: MIFAB, Jay R. Smith, Wade, Watts, Woodford, Zurn
Water Hammer Arresters: AMTROL, Josam, MIFAB, PPP, Sioux Chief, Jay R. Smith, Wade, Watts, Zurn
Brass Valves: American, Crane, Watts, Apollo
Water Coolers: Elkay, Oasis, Haws
Mop Sinks: Stern Williams, Acorn, Fiat

I TURE AND EQUIPMENT SCHEDULE

#	FIXTURE TYPE	WASTE		WATER SUPPLY		WATER FIX. CONN.		MANUFACTURE AND NOTES
		BELOW FLOOR	FIXTURE CONN.	COLD	HOT	COLD	HOT	
WC1	WATER CLOSET 1.28 GPF	3"	3"	1"		1"		KOHLER K-96053 WATER CLOSET. SLOAN REGAL 111 SFSM-1.28 FLUSH VALVE. BEMIS 1655SSCT SEAT.
WC2	ADA WATER CLOSET 1.28 GPF	3"	3"	1"		1"		KOHLER K-96057-B WATER CLOSET. SLOAN REGAL 111 SFSM-1.28 FLUSH VALVE. BEMIS 1655SSCT SEAT.
UR1	URINAL 0.125 GPF	2"	2"	3/4"		3/4"		KOHLER K-5452-ET URINAL. SLOAN REGAL 186-0.125 FLUSH VALVE.
UR2	ADA URINAL 0.125 GPF	2"	2"	3/4"		3/4"		KOHLER K-5452-ET URINAL. SLOAN REGAL 186-0.125 FLUSH VALVE.
LAV	ADA DROP-IN LAVATORY 0.5 GPM	2"	1-1/4"	1/2"	1/2"	1/2"	1/2"	KOHLER K-2196-4-0 LAVATORY. MOEN 8413F05 FAUCET.
MOP	TERRAZZO MOP SINK	3"	3"	1/2"	1/2"	1/2"	1/2"	STERN WILLIAMS MTB-3624, T-10-VB FAUCET, T-35 HOSE & WALL HOOK, T-40 MOP HANGER, BP PANELS.
EWC	ELECTRIC WATER COOLER W/ BOTTLE FILLER	2"	1-1/4"	1/2"		1/2"		ELKAY EZS8WSLK.
NFWH	NON-FREEZE WALL HYDRANT			3/4"		3/4"		WOODFORD B65.
HB	INTERIOR HOSE BIBB			3/4"		3/4"		WOODFORD 84.
FD	FLOOR DRAIN WITH WATERLESS TRAP PRIMER	3"	3"					WATTS FD-190-PR-60 FLOOR DRAIN. RECTORSEAL "SURESEAL PLUS" WATERLESS TRAP PRIMER.
FCO	FLOOR CLEANOUT	SEE DWG.	SEE DWG.					WATTS C012. PROVIDE CARPET MARKER WHEN INSTALLED UNDER CARPET.
GCO	GRADE CLEANOUT	SEE DWG.	SEE DWG.					WATTS CO-200-RX-4-60.
FS	FLOOR SINK	3"	3"					WATTS FS-740-NH-150.
HD	HUB DRAIN	2"	2"					WATTS FD-100-DD-60.

GENERAL IRE PROTECTION NOTES:

Fire protection sprinkler system design is delegated to the contractor. The fire protection subcontractor is responsible for code compliance, research, design, coordination, and installation of a complete and functional hydraulically calculated sprinkler system (and standpipe system, if required) that meets the approval of and is in accordance with all applicable regulations and requirements of the following and as further specified:

Current edition of NFPA

Applicable Codes

Authorities having jurisdiction.

PUMP SCHEDULE

MARK	PUMP TYPE	BASIS OF DESIGN MANUFACTURER	MODEL NUMBER	RPM	HP/ WATTS	GPM	FEET HEAD	*ELECTRICAL	
								VOLTS	PHASE
RC	RECIRCULATION	TACO	006e3	1140-3720	44 WATTS	2	2.53	120	1

CONTRACTOR SHALL CONSULT THE ELECTRICAL DOCUMENTS FOR VOLTAGE AND PHASE

WATER HEATER TANK SCHEDULE

MARK	MANUFACTURER	MODEL NUMBER	TYPE	GALLON	KW	MIN. UEF	*ELECTRICAL	
							VOLTS	PHASE
WH-C07	A.O. SMITH	ENT-50	RESIDENTIAL ELECTRIC	50	4.5	0.92	277	1
EV	WATTS	LFBRVM1	COMBINATION BALL VALVE AND RELIEF VALVE					

CONTRACTOR SHALL CONSULT THE ELECTRICAL DOCUMENTS FOR VOLTAGE AND PHASE.
WATER HEATERS SHALL HAVE FACTORY-INSTALLED HEAT TRAPS.

LEGEND

	SHUTOFF VALVE		COLD WATER	(TYP)	TYPICAL	VTR	VENT THRU ROOF
	CHECK VALVE		HOT WATER	C.T.	COUNTER-TOP	AFF	ABOVE FINISHED FLOOR
	PIPE UP		HOT WATER RETURN	DN	DOWN	CW	COLD WATER
	PIPE DOWN		SEWER VENT	CONN.	CONNECTION	HW	HOT WATER
PDI-B (H)	PDI UNIT / WATER HAMMER ARRESTOR		SEWER	NTS	NOT TO SCALE	B.F.F.	BELOW FINISH FLOOR
DWGS.	DRAWINGS	F	FIRE SPRINKLER	VT	VENT	FLR	FLR
GREASE	GREASE LADEN SEWER	G	GAS			FFE	FINISHED FLOOR ELEVATION
O	OVERFLOW ROOF DRAINAGE	S	STORM				

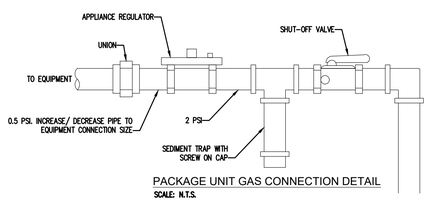

PACKAGE UNIT GAS CONNECTION DETAIL
SCALE: N.T.S.

ALPHA BLDG SET 08-27-2024

PHASE 2

Seal: GEORGIA REGISTERED PROFESSIONAL ENGINEER KRUNAL M PATEL

TOTAL ENGINEERS
169 New Street, Macon, GA 31201
(478)741-4632 T.E. project # 23-101
www.totalengineers.com

Client: sunbelt BUILDERS™
10841 HWY 9 COVINGTON GA 30014 | 770788 0 1 770788 046

Project: R. L. COUSINS COMMUNITY CENTER
NEWTON CO. BOC RFP #24-04
8134 GEIGER STREET, N.W.
COVINGTON, GEORGIA

Issue Date:	Initial:	Drwg. Revision Description:

Project No.:
Drwg. Date: 04/15/24
Drwg. Revision:
Drawn By: JWK & KMP
Checked By: KMP
File Name:

Sheet Title: *PLUMBING SPECIFICATIONS*

Sheet No.: P-0.1

IRE PROTECTION BASIC MATERIALS AND METHODS
(IRE PROTECTION SECTION 1 O 2)

PART 1 GENERAL

1.1 SECTION INCLUDES

A. Pipe, fittings, valves, and connections for combination sprinkler and standpipe systems.

1.2 REFERENCES

A. ASME B16.1 – Gray Iron Pipe Flanges and Flanged Fittings: Classes 25, 125, and 250; The American Society of Mechanical Engineers.

B. ASME B16.3 – Malleable Iron Threaded Fittings; The American Society of Mechanical Engineers.

C. ASME B16.4 – Gray Iron Threaded Fittings; The American Society of Mechanical Engineers.

D. ASME B16.5 – Pipe Flanges and Flanged Fittings; The American Society of Mechanical Engineers; (ANSI/ASME B16.5).

E. ASTM A 47/A 47M – Standard Specification for Ferritic Malleable Iron Castings.

F. ASTM A 53/A 53M – Standard Specification for Pipe, Steel, Black and Hot-Dipped, Zinc-Coated, Welded and Seamless.

G. ASTM A 795/A 795M – Standard Specification for Black and Hot-Dipped Zinc-Coated (Galvanized) Welded and Seamless Steel Pipe for Fire Protection Use.

H. NFPA 13 – Standard for the Installation of Sprinkler Systems; National Fire Protection Association.

I. NFPA 24 – Standard for the Installation of Private Fire Service Mains and Their Appurtenances; National Fire Protection Association.

J. NFPA 72 – National Fire Alarm Code.

K. NFPA 101 – Code for Safety to Life from Fire in Buildings and Structures.

L. 2018 International Fire Code (as adopted and amended by the Rules and Regulations of the Safety Fire Commissioner Chapter 120-3-3-04(3))

M. UL (FPED) – Fire Protection Equipment Directory; Underwriters Laboratories Inc.; current edition.

N. UL 262 – Gate Valves for Fire-Protection Service; Underwriters Laboratories Inc..

O. Chapter 120-3-3 of the Rules of the Safety Fire Commissioner.

P. Georgia State Minimum Standard Building Code (International Building Code 2018 Edition, with Georgia State Amendments). NFPA Code, where more stringent, shall take precedence.

1.3 SUBMITTALS

A. Product Data: Provide manufacturers catalogue information. Indicate valve data and ratings.

B. Shop Drawings: Indicate pipe materials used, jointing methods, supports, floor and wall penetration seals. Indicate installation, layout, weights, mounting and support details, and piping connections.

C. Project As-Built Documents: Record actual locations of components and tag numbering.

D. Operation and Maintenance Data: Include installation instructions and spare parts lists.

1.4 QUALITY ASSURANCE

A. Fire Protection
1. The Contractor expressly warrants that the company performing the installation of the fire protection systems has demonstrated proficiency in the installation, start-up and adjustment of such systems by the successful performance of work of the nature specified herein on at least 5 commercial or institutional buildings, each containing minimum of 10,000 ft2 of protected area or greater.
2. The Contractor further warrants that the aforesaid subcontractor has trained personnel, instruments, tools, and equipment to perform the installation specified.
3. The Contractor also warrants that the aforesaid installer has been in business performing services of the nature specified herein for at least five-years.
4. Provide a certificate of competency as issued by the Georgia State Fire Marshal's Office.

B. Conform to UL and FM requirements.

C. Valves: Bear UL and FM label or marking. Provide manufacturer's name and pressure rating marked on valve body.

D. Products Requiring Electrical Connection: Listed and classified as suitable for the purpose specified and indicated.

1.5 DELIVERY, STORAGE, AND PROTECTION

A. Deliver and store valves in shipping containers, with labeling in place.

B. Provide temporary protective coating on cast iron and steel valves.

C. Provide temporary end caps and closures on piping and fittings. Maintain in place until installation.

1.6 EXTRA MATERIALS

A. Provide additional materials as provided in these specifications and by NFPA.

PART 2 PRODUCTS

2.1 GENERAL SYSTEM AND PRODUCT REQUIREMENTS

A. Sprinkler Systems: Conform work to NFPA 13.

B. Standpipe and Hose Systems: Conform to NFPA 14.

C. Welding Materials and Procedures: Conform to ASME Code.

D. Building is light hazard, ordinary hazard group, and extra hazard group. Pipe sizes shall be hydraulically calculated based upon flow test to be conducted by contractor.

E. Provide hydraulic calculations over the most remote 1500 square feet providing density required for hazard as indicated in NFPA 13. Minimum discharge pressure shall be 7.0 PSI. Minimum residual pressure at city water main in the street shall be 20.0 PSI. Provide 10.0 PSI minimum safety margin in hydraulic calculations at design point. Design area reduction per NFPA 13 is not allowed.

F. Basis of design: Contractor shall perform, or have performed, at the same time, a Fire Flow and Twenty Four Hour Static Test to assure flow equals or exceeds specified basis of design flow rate prior to preparing shop drawings, installing system or performing calculations. Prepare calculations based on confirmed flow data or basis of design flow data, whichever is lowest. Flow test shall be performed in accordance with NFPA 13 and Rules and Regulations of Safety Fire Commissioner, O.C.G.A. Chapter 120-3-3. Modify flow test pressures (static and residual), if pressure recorded in 24 hour test is lower than flow test pressures for one hour duration, to lowest hour test pressure.

G. No pipe shall be routed above electrical panels and equipment as required by National Electrical Code, on control side or beneath suspended mechanical equipment except where specifically required by Code, in which case, provisions shall be made for service access.

H. Inspectors test connection(s) shall discharge to the outside of the building in location(s) acceptable to the Architect.

I. Inside auxiliary drains, if needed, shall discharge in location(s) acceptable to the Architect.Drain and test connection piping, if in finished space, shall be installed concealed.

2.2 BURIED PIPING

A. Refer to Civil plans and specifications for piping type.

2.3 ABOVE GROUND WET SYSTEM PIPING

A. Steel Pipe: ASTM A 795 Schedule 10 or ASTM A 53 Schedule 40, black. Piping 2" and smaller shall be threaded. Piping 2 1/2" and larger shall be grooved with rigid couplings.
1. Cast Iron Fittings: ASME B16.1, flanges and flanged fittings and ASME B16.4, threaded fittings.
2. Malleable Iron Fittings: ASME B16.3, threaded fittings and ASTM A 47/A 47M.
3. Mechanical Grooved Couplings: Rigid malleable iron housing clamps to engage and lock, "C" shaped elastomeric sealing gasket, steel bolts, nuts, and washers; galvanized for galvanized pipe. Reducing couplings are NOT allowed.

2.4 PIPE HANGERS AND SUPPORTS

A. Hangers for Pipe Sizes 1/2 to 1-1/2 inch: Malleable iron, adjustable swivel, split ring.

B. Hangers for Pipe Sizes 2-inches and Over: Carbon steel, adjustable, clevis.

C. Multiple or Trapeze Hangers: Steel channels with welded spacers and hanger rods.

D. Vertical Support: Steel riser clamp.

E. Floor Support: Cast iron adjustable pipe saddle, lock nut, nipple, floor flange, and concrete pier or steel support.

F. Provide support for any vertical pipe 36" in length or greater except armovers. Provide supports 12'-0" O.C. maximum or at floor levels.

G. Threaded rods shall NOT be bent. Bending is permitted only in unthreaded sections of hanger rods. Bending shall occur as close to the hanger as possible. Provide a swivel assembly if required.

2.5 GATE VALVES

A. Up to and including 2 inches:
1. Manufacturers:
a. Nibco Scott; Product T-104-O
b. Jenkins; Product 275U
c. Hammond; Product 1B681
d. Stockham; Product B-133
e. Kennedy; Product Fig. 66
2. Bronze body, bronze trim, rising stem, handwheel, solid wedge or disc, threaded ends.

B. Over 2 inches:
1. Manufacturers:
a. Nibco Scott; Product F-607-OTS
b. Crane; Product 467
c. Jenkins; Product 825-A
d. Hammond; Product 1R1154
e. Stockham; Product G-634
f. Kennedy. Product Fig. 68
2. Iron body, bronze trim, rising stem pre-grooved for mounting tamper switch, handwheel, OS&Y, solid rubber covered bronze or cast iron wedge, flanged ends.

2.6 GLOBE VALVES

A. Bronze body, rubber disc, union bonnet, 174 W.W.P., threaded ends.

B. Up to and including 2 inches:
1. Manufacturers:
a. Nibco-Scott; Product KT-65.
b. Kennedy; Product 97SD.
c. United; Product 125S.
d. Fairbanks; Product 4691-3.

2.7 ANGLE VALVES

A. Bronze body, rubber disc, union bonnet, 174 non-shock cold water, threaded ends.

B. Up to and including 2 inches:
1. Manufacturers:
a. Nibco-Scott; Product T-301-W.
b. Kennedy; Product 985D.
c. United; Product 126S.
d. Fairbanks; Product 4691-3.

2.8 BUTTERFLY VALVES: Not allowed.

2.9 CHECK VALVES

A. Iron body, U.L. Listed- F.M. Approved, swing type, bronze trimmed, bronze seat and disc, flanged ends.

B. Manufacturers:
1. Jenkins; Product 629
2. Crane; Product 375
3. Stockham; Product G-939
4. Mueller; Product A-2120-6
5. Kennedy; Product #126

2.10 INDICATOR POSTS

A. Cast iron base, top section, & cap; malleable iron wrench and locking device; steel stem; cast iron coupling; bronze target holder with aluminum "shut" and "open" targets; Underwriters Laboratories listed, and Factory Mutual approved; available for varying trench depth; and with adjustable depth features.

B. Manufacturers:
1. Kennedy Fig. Series 741.
2. Nibco NIP-1.
3. Stockham G-951.
4. Mueller A-20804.

2.11 UNDERGROUND GATE VALVES

A. 2 1/2-inch and larger, iron body, non-rising stem, bronze stem, iron mounted disc with bronze rings, cast iron 2-inch square operating nut, flange, ends, AWWA spec. C-500.

B. Manufacturers:
1. Kennedy Fig. 701X.
2. Nibco F-609.
3. Stockham G-635.
4. Mueller A-2075-20.
5. M & H Fig. 3067.

PART 3 EXECUTION

3.1 PREPARATION

A. Ream pipe and tube ends. Remove burrs. Bevel plain end ferrous pipe.

B. Remove scale and foreign material, from inside and outside, before assembly.

C. Prepare piping connections to equipment with flanges or unions.

D. Storage: All piping shall be stored above ground and protected to prevent dirt and debris from entering pipe.

3.2 INSTALLATION

A. Install sprinkler system and service main piping, hangers, and supports in accordance with NFPA 13 and these specifications.

B. Install standpipe piping, hangers, and supports in accordance with NFPA 14.

C. Install post indicator valve (PIV) upstream of backflow device.

D. Route piping in orderly manner, plumb and parallel to building structure. Maintain gradient.

E. Install piping to conserve building space, to not interfere with use of space and other work.

F. Group piping whenever practical at common elevations.

G. All piping shall be installed above ceilings in a concealed manner except where no ceilings are present

H. Sleeve pipes passing through partitions, walls, and floors.

I. Install piping to allow for expansion and contraction without stressing pipe, joints, or connected equipment.

J. Reducing Tees: Weld-on threaded outlet tees and Coupolet-300 by Bonney Forge Division of Energy Products Group, Central Sprink 701, "TEE-LET" 300 by Merit Manufacturing Corp., NAP300 by North Alabama Pipe Corp., F400 by Grinnell Corp. may be used for side outlet reducing tees more than two pipe sizes smaller than main. Discs shall be retrieved and connected to pipe at point of cutting. Cutting shall comply with NFPA 13, Chapter 6.5.2.9.

K. Couplings may be used on gridded systems at only one end of each gridded branch line or on 2 1/2" or larger riser nipple to 2" or smaller branch line to facilitate connection provided that the coupling is connected to piping by a cut groove. Rolled grooves are not acceptable.

L. Pipe Hangers and Supports:
1. Install hangers to provide minimum 1/2 inch space between finished covering and adjacent work.
2. Place hangers within 12 inches of each horizontal elbow.
3. Use hangers with 1-1/2 inch minimum vertical adjustment. Design hangers for pipe movement without disengagement of supported pipe.
4. Support vertical piping at every floor. Support riser piping independently of connected horizontal piping.
5. Where several pipes can be installed in parallel and at same elevation, provide multiple or trapeze hangers.

M. Slope piping and arrange systems to drain at low points. Use eccentric reducers to maintain top of pipe level.

N. Prepare pipe, fittings, supports, and accessories for finish painting. Where pipe support members are welded to structural building framing, scrape, brush clean, and apply one coat of zinc rich primer to welding.

O. Do not penetrate building structural members unless indicated.

P. Provide sleeves when penetrating floors and walls. Seal pipe and sleeve penetrations to achieve fire resistance equivalent to fire separation required.

Q. When installing more than one piping system material, ensure system components are compatible and joined to ensure the integrity of the system. Provide necessary joining fittings. Ensure flanges, union, and couplings for servicing are consistently provided.

R. Die cut threaded joints with full cut standard taper pipe threads with red lead and linseed oil or other non-toxic joint compound applied to male threads only.

S. Install valves with stems upright or horizontal, not inverted. Remove protective coatings prior to installation.

T. Provide gate valves for shut-off or isolating service. No valve shall be installed with the centerline, if horizontal, or wheel, if vertical, more than 9'-0" AFF.

U. Provide drain valves at main shut-off valves, low points of piping and apparatus.

3.3 CLEANING AND PROTECTION

A. All materials, equipment and mechanical rooms shall be cleaned prior to the Final Inspection.

B. Wash down and scrub clean all mechanical room floors, walls, equipment bases and equipment.

C. Paint equipment where finish has been damaged requiring retouching of finish to match factory finish.

D. Chipped or scraped paint shall be retouched to match original finish.

E. All dents and sags in equipment casing shall be straightened.

F. All equipment, pipe, pipe fittings and appurtenances shall be free of rust and stains prior to substantial completion.

3.4 FINISHING EQUIPMENT AND MATERIAL

A. Use paint systems specified in Division 9 for the substrates to be finished.

B. Paint shop-primed equipment.

C. Re-install electrical cover plates, hardware, light fixture trim, escutcheons, and fittings removed prior to finishing.

D. Paint all exposed pipes, unless otherwise indicated.

E. All ferrous fasteners and hanger supports not having a corrosion resistant plated finish shall be painted to prevent rust.

F. Paint all equipment, including that which is factory-finished, exposed to weather or to view on the roof and outdoors.

G. Paint all exposed un-insulated ferrous materials.

END OF SECTION

IRE SUPPRESSION SPRINKLERS
(IRE PROTECTION SECTION 2 O 2)

ALPHA BLDG SET 08-27-2024

PART 1 GENERAL

1.1 SECTION INCLUDES

A. Wet Type Sprinkler System

B. Dry-pipe sprinkler system.

C. System design, installation, and certification.

D. Fire department connections.

1.2 REFERENCES

A. NFPA 13 – Standard for the Installation of Sprinkler Systems; National Fire Protection Association.

B. NFPA 14 – Standard for the Installation of Standpipe and Hose Systems; National Fire Protection Association.

1.3 SUBMITTALS

A. Product Data: Provide data on sprinklers, valves, and specialties, including manufacturers catalog information. Submit performance ratings, rough-in details, weights, support requirements, and piping connections.

B. Shop Drawings:
1. Indicate hydraulic calculations, detailed pipe layout, hangers and supports, sprinklers, components and accessories. Indicate system controls.
2. Submit shop drawings, product data, and hydraulic calculations to Fire Marshall for approval and to Architect for review. Submit to Architect prior to submitting to Fire Marshal. Submit proof of approval to the Architect.

C. Project As-Built Documents: Record actual locations of sprinklers and deviations of piping from drawings. Indicate drain and test locations. Provide two (2) CD and three (3) paper copies of as-built drawings.

D. Manufacturer's Certificate: Certify that system has been tested and meets or exceeds specified requirements and code requirements. All certificates shall be signed by certificate holder.

E. Operation and Maintenance Data: Include components of system, servicing requirements, record drawings, inspection data, replacement part numbers and availability, and location and numbers of service depot.

1.4 QUALITY ASSURANCE

A. Maintain one copy of referenced design and installation standard on site.

B. Conform to UL requirements.

C. Equipment and Components: Provide products that bear UL label or marking.

D. Products Requiring Electrical Connection: Listed and classified by Underwriters Laboratories Inc., as suitable for the purpose specified and indicated.

1.5 DELIVERY, STORAGE, AND PROTECTION

A. Store products in shipping containers and maintain in place until installation. Provide temporary inlet and outlet caps. Maintain caps in place until installation.

B. Store piping off floor and out of elements. Provide cover for piping to prevent dirt and debris from entering piping. Piping and fittings shall be rust free when installed.

1.6 EXTRA MATERIALS

A. Provide extra sprinklers of type and size matching those installed, in quantity required by referenced NFPA design and installation standard.

B. Provide suitable wrenches for each sprinkler type.

C. Provide metal storage cabinet located at piping entrance to building.

PART 2 PRODUCTS

2.1 SPRINKLER SYSTEM REQUIREMENTS

A. Sprinkler System: Provide coverage for entire building.

B. Occupancy: comply with NFPA 13.

C. Water Supply: Contractor shall perform or have performed an NFPA-13 water flow test data and a 24 hour static pressure test. Adjust flow test to lowest pressure recorded by 24 hour test of one hour duration.

D. Interface system with building fire alarm system.

E. Provide fire department connections where indicated on FP and civil drawings.

2.2 SPRINKLERS

A. Tyco and affiliates, Automatic Sprinkler, Reliable, Viking.

B. All sprinklers installed shall be by the same manufacturer.

C. Contractor shall select temperature ratings in accordance with NFPA 13, paragraph 8.3.2.

D. Suspended Ceiling Type: Recessed pendant type with matching flush push on escutcheon plate.
1. Finish: Chrome plated.
2. Escutcheon Plate Finish: Chrome plated.
3. Quick response Glass bulb type temperature rated for specific area hazard.

E. Gypsum Board Ceiling Type: Concealed pendant type with matching push on escutcheon plate.
1. Finish: Brass.
2. Escutcheon Plate Finish: Enamel, Verify color with architect.

F. Exposed Area Type: Standard upright type.
1. Finish: Brass.
2. Fusible Link: Quick Response Fusible solder link type temperature rated for specific area hazard.

G. Sidewall Type: Standard horizontal sidewall type with matching flush push on two piece escutcheon plate.
1. Finish: Chrome plated.
2. Escutcheon Plate Finish: Chrome plated.
3. Quick Response Fusible solder link type temperature rated for specific area hazard.

H. Guards: Finish to match sprinkler finish.

2.3 PIPING SPECIALTIES

A. Dry Pipe Sprinkler Alarm Valve: Check type valve with divided seat ring, rubber faced clapper to automatically actuate water motor alarm and electric alarm, with accelerator; with test and drain valve.

B. Water Motor Alarm: Hydraulically operated impeller type alarm with aluminum alloy chrome plated gong and motor housing, nylon bearings, and inlet strainer. By same manufacturer as Alarm Valve.

C. Electric Alarm: Electrically operated chrome plated gong with pressure alarm switch.

D. Water Flow Switch: Vane type switch for mounting horizontal or vertical, with two contacts; rated 10 amp at 125 volt AC and 2.5 amp at 24 volt DC. Notifier, Simplex, Potter, Grinnell.

E. Tamper Switch: Switch designed for installation on indicator valves with cased aluminum housing with red finish. Notifier, Simplex, Potter, Grinnell.

F. Fire Department Connections: Elkhart, Croker Standard, Potter Roemer.
1. Type: Free standing type with ductile iron pedestal chrome plated finish.
2. Outlets: Two way with thread size to suit fire department hardware; threaded dust cap and chain of matching material and finish.
3. Drain: 3/4 inch automatic drip, outside.
4. Label: "Sprinkler – Fire Department Connection".

PART 3 EXECUTION

3.1 INSTALLATION

A. Install in accordance with referenced NFPA design and installation standard and these specifications.

B. Sprinklers shall be in line with and centered between down lights unless shown otherwise.

C. Install equipment in accordance with manufacturer's instructions.

D. Each floor of multi story buildings shall be zoned.

E. All dry system piping shall be galvanized down stream of dry valve.

F. Install buried shut-off valves in valve box. Provide post indicator.

G. Provide approved double detector check assembly at sprinkler system water source connection.

H. Locate fire department connection within forty (40'-0") feet of nearest fire hydrant and with sufficient clearance from walls, obstructions, or adjacent siamese connectors to allow full swing of fire department wrench handle.

I. Locate outside alarm gong on building wall at piping entrance to building.

J. Place pipe runs to minimize obstruction to other work.

K. Place piping in concealed spaces above finished ceilings.

L. Center sprinklers in two directions in ceiling tile and provide piping offsets as required.

M. Apply masking tape or paper cover to ensure concealed sprinklers, cover plates, and sprinkler escutcheons do not receive field paint finish. Remove after painting. Replace painted sprinklers.

N. Where sprinklers are required under rectangular duct, the centerline of the sprinkler shall be minimum 6" under duct

O. Install air compressor on vibration isolators.

P. Flush entire piping system of foreign matter.

Q. Hydrostatically test entire system.

R. Require test be witnessed by Fire Marshall.

S. All drain piping shall discharge to the outside 6" maximum above grade unless noted otherwise.

T. Where sprinklers are required under oval or round duct, the centerline of the sprinkler shall be under the centerline of the duct.

3.2 INTERFACE WITH OTHER PRODUCTS

A. Ensure required tamper and flow devices are installed and connected as required to fire alarm system including but not limited to Floor control valves, alarm check valve, elevator shaft isolation valve, Post Indicator Valve (PIV) and backflow device valves.

3.3 SCHEDULES

A. System Hazard Areas:
1. Office & Public Areas and similar occupancies – Light Hazard Design; 0.10 GPM/sq. ft. over the most remote 1500 square foot.
2. Building Service Areas, Electrical Equipment Rooms, General Storage Areas, Mechanical Equipment Rooms, Restaurant Service Areas, and similar occupancies – Ordinary Hazard Group 1 Design; 0.15 GPM/sq.ft. over the most remote 1500 square foot.

END OF SECTION

PHASE 2

Seal: GEORGIA REGISTERED PROFESSIONAL ENGINEER KRUNAL M PATEL

TOTAL ENGINEERS
169 New Street, Macon, GA 31201
(478)741-4632 T.E. project # 23-101
www.totalengineers.com

Client: sunbelt BUILDERS™
10841 HWY 9 COVINGTON GA 30014 : 770 786 0 1 770 786 046

Project:
R. L. COUSINS COMMUNITY CENTER
NEWTON CO. BOC RFP #24-04
8134 GEIGER STREET, N.W.
COVINGTON, GEORGIA

Issue Date:	Initial:	Drwg. Revision Description:

Project No.:
Drwg. Date: 04/15/24
Drwg. Revision:
Drawn By: JWK & KMP
Checked By: KMP
File Name:

Sheet Title:
FIRE SPRINKLER SPECIFICATIONS

Sheet No.:
P-0.2

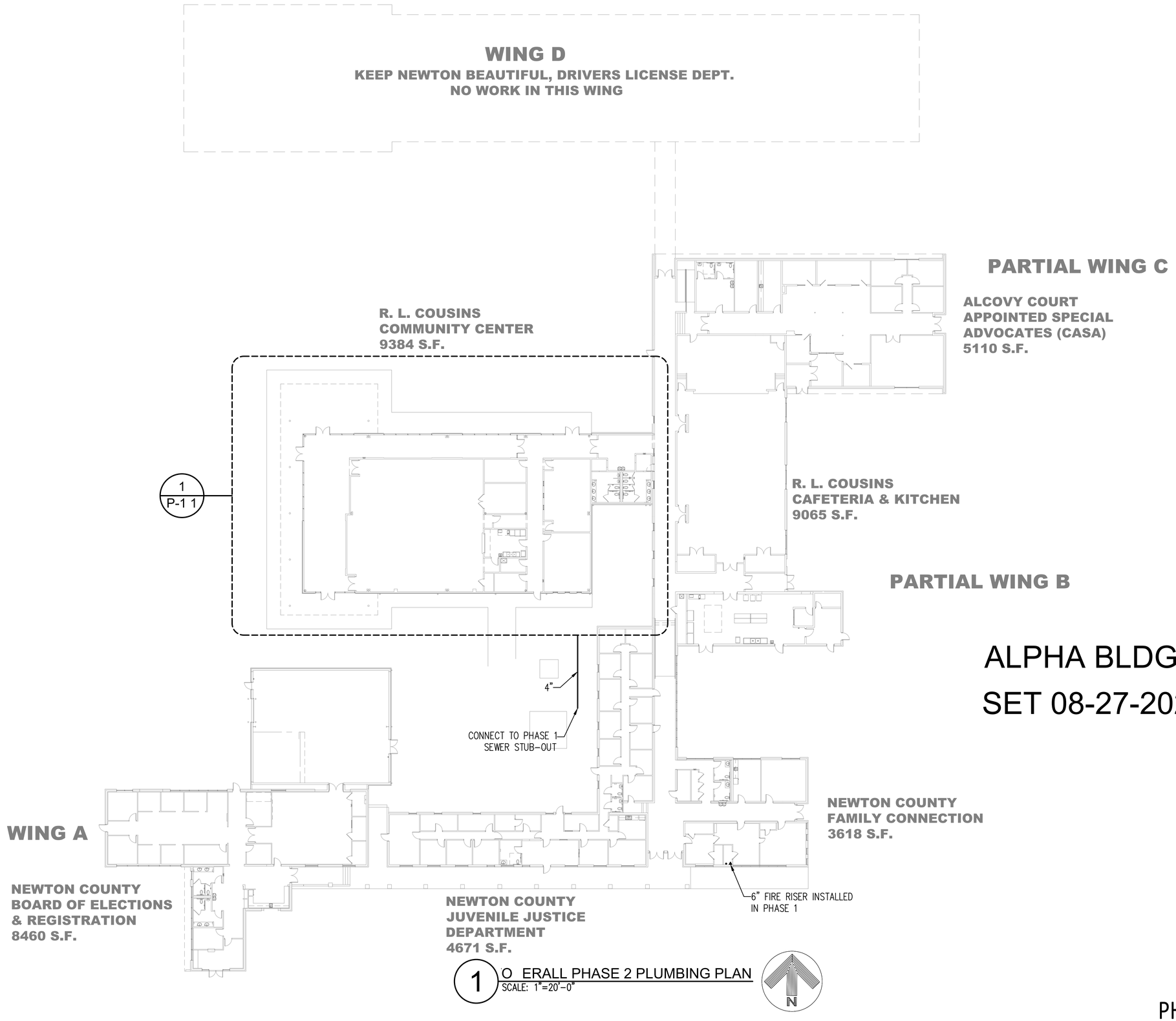

1 O ERALL PHASE 2 PLUMBING PLAN
SCALE: 1"=20'-0"

ALPHA BLDG
SET 08-27-2024

PHASE 2

Seal:
GEORGIA REGISTERED PROFESSIONAL ENGINEER KRUNAL M PATEL

TOTAL ENGINEERS
169 New Street, Macon, GA 31201
(478)741-4632 - T.E. project # 23-101
www.totalengineers.com

Client:
SUNBELT BUILDERS™
10841 HWY 8 COVINGTON GA 30014 : 770 786 0 1 770 786 046

Project:
R. L. COUSINS COMMUNITY CENTER
NEWTON CO. BOC RFP #24-04
8134 GEIGER STREET, N.W.
COVINGTON, GEORGIA

Issue Date:	Initial:	Drwg. Revision Description:

Project No.:
Drwg. Date: 04/15/24
Drwg. Revision:
Drawn By: JWK & KMP
Checked By: KMP
File Name:

Sheet Title:
OVERALL PHASE 2 PLUMBING PLAN

Sheet No.:
P-1.0

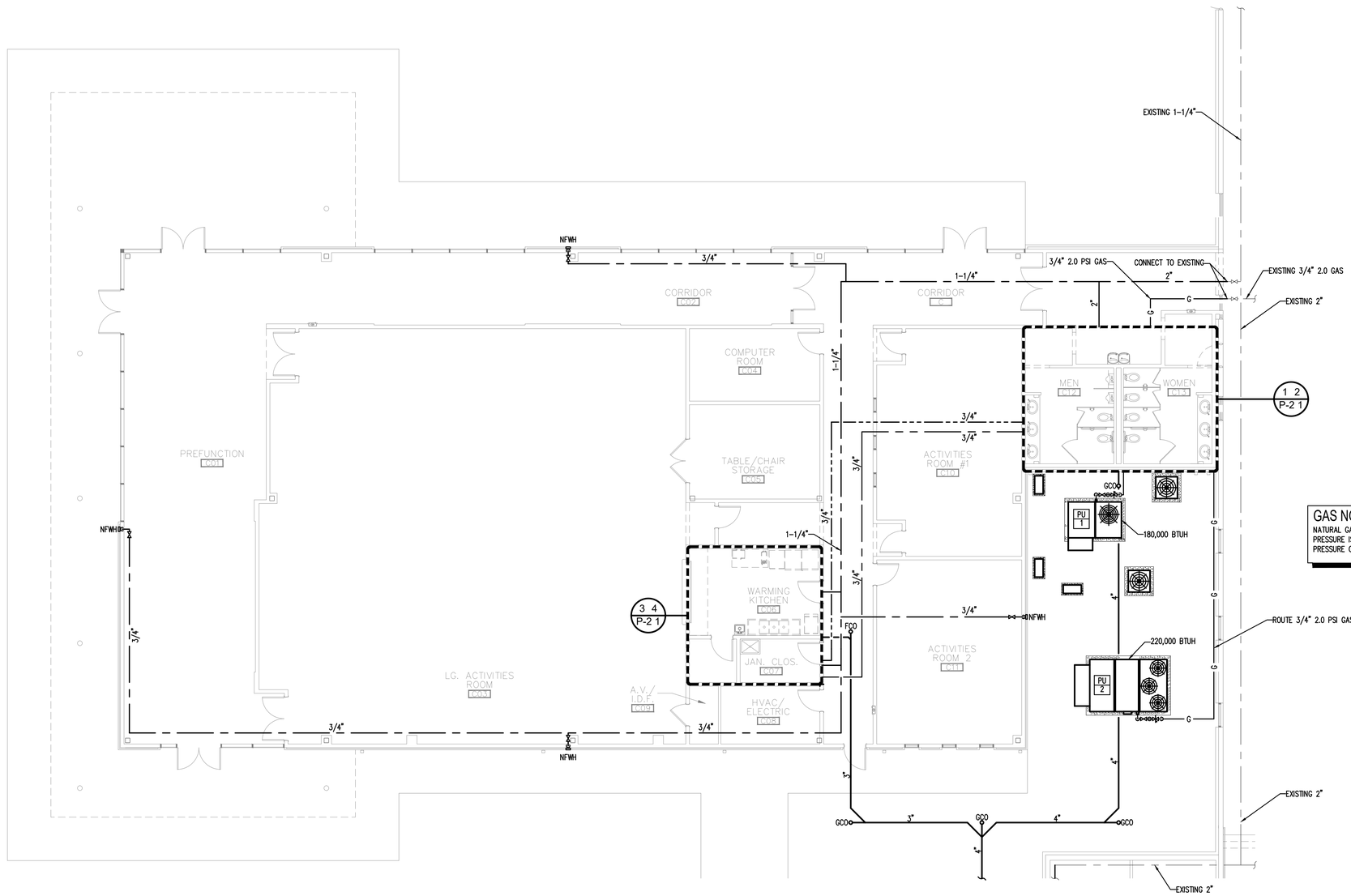

GAS NOTES:
NATURAL GAS SYSTEM PRESSURES WITHIN BUILDING: PRIMARY PRESSURE IS 2 PSIG, AND IS REDUCED TO SECONDARY PRESSURE OF 0.5 PSIG AT INDIVIDUAL POINTS OF USE.

1 COMMUNIT BUILDING PLUMBING PLAN
SCALE: 1/8"=1'-0"

N

ALPHA BLDG SET 08-27-2024

PHASE 2

Seal: GEORGIA REGISTERED PROFESSIONAL ENGINEER KRUNAL M PATEL

TOTAL ENGINEERS
169 New Street, Macon, GA 31201
(478)741-4632 - T.E. project # 23-101
www.totalengineers.com

Client: SUNBELT BUILDERS™
10841 HWY 8 COVINGTON GA 30014 : 770 786 0 1 770 786 048

Project: R. L. COUSINS COMMUNITY CENTER
NEWTON CO. BOC RFP #24-04
8134 GEIGER STREET, N.W.
COVINGTON, GEORGIA

Issue Date:	Initial:	Drwg. Revision Description:

Project No.:
Drwg. Date: 04/15/24
Drwg. Revision:
Drawn By: JWK & KMP
Checked By: KMP
File Name:

Sheet Title: COMMUNITY BLDG PLUMBING PLAN

Sheet No.: P-1.1

ALPHA BLDG SET 08-27-2024

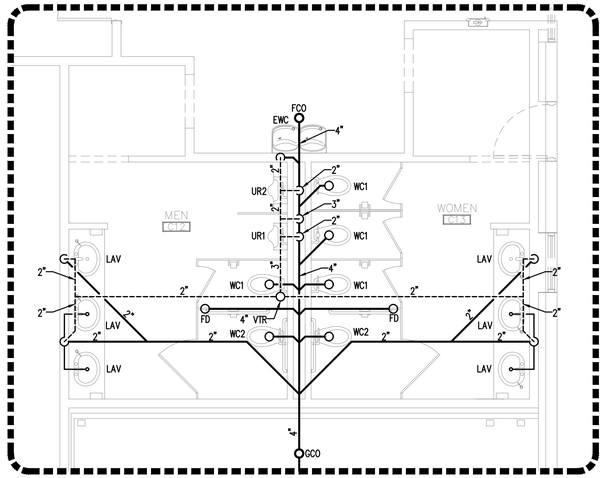

1 RESTROOM PLUMBING PLAN - SEWER
SCALE: 1/4"=1'-0"

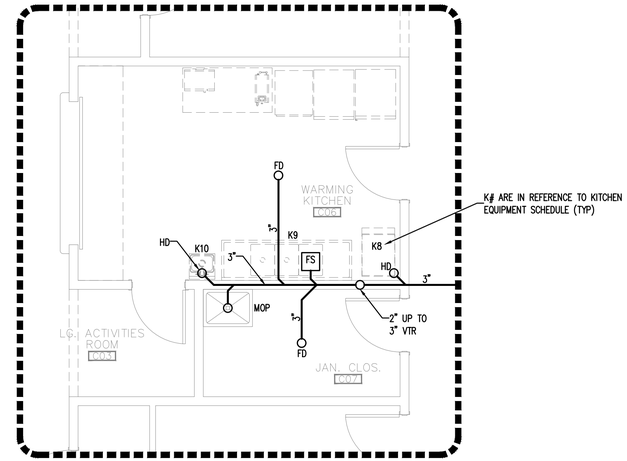

3 WARMING KITCHEN PLUMBING PLAN - SEWER
SCALE: 1/4"=1'-0"

KITCHEN EQUIPMENT NOTES:

PLUMBER IS TO FURNISH AND INSTALL ALL NECESSARY VALVES, TRAPS, TAIL PIECES, LINE STRAINERS, WATER PRESSURE REDUCING VALVES AND VACUUM BREAKERS AND CONNECT ALL WATER, WASTE, AND VENT LINES TO KITCHEN EQUIPMENT. CONNECT TO KITCHEN EQUIPMENT THROUGH INDIVIDUAL WATER FILTERS WHEN REQUIRED BY EQUIPMENT MANUFACTURER. USE FLEXIBLE STAINLESS STEEL LINES WITH QUICK DISCONNECT CONNECTIONS. VERIFY WITH OWNERS REPRESENTATIVE EXACT LOCATION OF EQUIPMENT AND PLUMBING ROUGH IN SIZES, LOCATIONS, AND REQUIREMENTS.

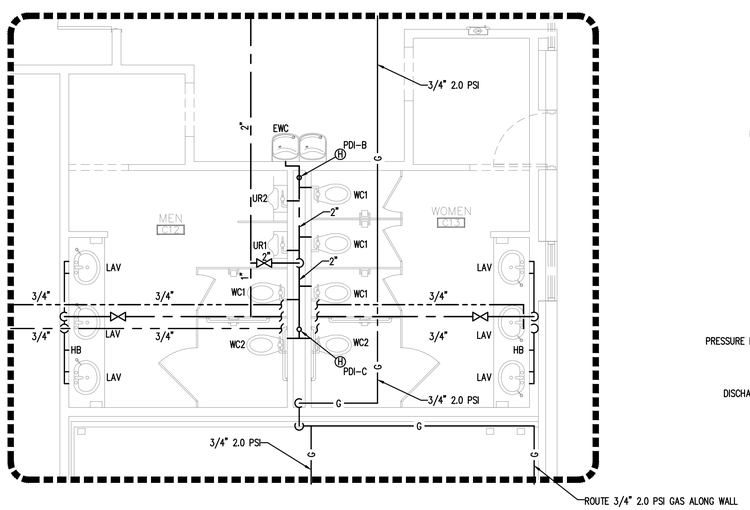

2 RESTROOM PLUMBING PLAN - WATER
SCALE: 1/4"=1'-0"

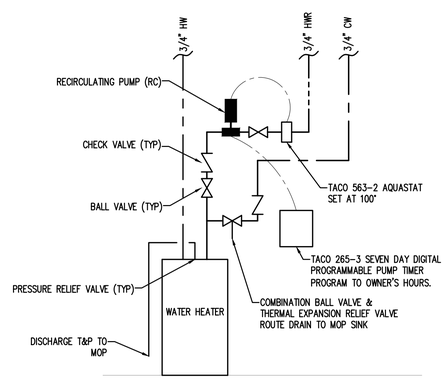

NOTE:
GENERAL PIPING SCHEMATIC
SEE FLOOR PLAN FOR LOCATIONS

WATER HEATER (WH-C07) PIPING SCHEMATIC
SCALE: N.T.S.

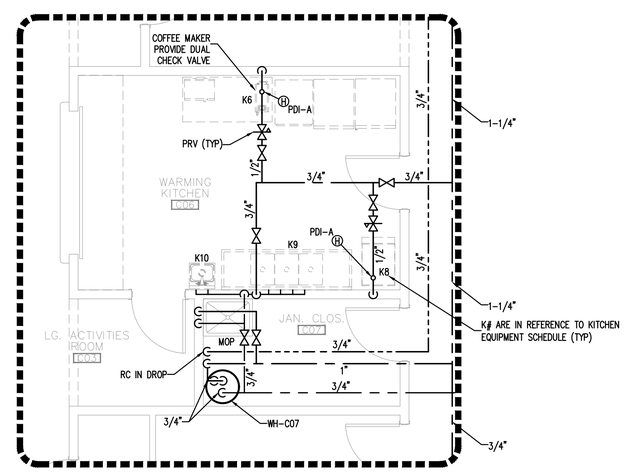

4 WARMING KITCHEN PLUMBING PLAN - WATER
SCALE: 1/4"=1'-0"

PHASE 2

Seal: GEORGIA REGISTERED PROFESSIONAL ENGINEER KRUNAL M PATEL

TOTAL ENGINEERS
169 New Street, Macon, GA 31201
(478)741-4632 - T.E. project # 23-101
www.totalengineers.com

Client: SUNBELT BUILDERS™
10841 HWY 8 COVINGTON GA 30014 : 770 788 0 1 770 788 048

Project:
R. L. COUSINS COMMUNITY CENTER
NEWTON CO. BOC RFP #24-04
8134 GEIGER STREET, N.W.
COVINGTON, GEORGIA

Issue Date:	Initial:	Drwg. Revision Description:

Project No.:
Drwg. Date: 04/15/24
Drwg. Revision:
Drawn By: JWK & KMP
Checked By: KMP
File Name:

Sheet Title:
R&R & KITCHEN PLUMBING PLANS

Sheet No.:
P-2.1

ELECTRICAL SPECIFICATIONS

DIVISION 26

ELECTRICAL

SECTION A: GENERAL ELECTRICAL REQUIREMENTS

1. THESE PLANS AND SPECIFICATIONS APPLY TO R. L. COUSINS CENTER, CONVINGTON, GEORGIA. THE WORK DESCRIBED BY THESE PLANS AND SPECIFICATIONS APPLY TO THE INDICATED PROJECT AND MAY NOT BE MODIFIED OR REUSED WITHOUT WRITTEN APPROVAL OF THE ENGINEER.
2. ALL WORK SHALL BE PERFORMED BY LICENSED ELECTRICAL CONTRACTOR WITH MINIMUM OF TWO YEARS OF EXPERIENCE. LIST OF PREVIOUS JOBS AND REFERENCES SHALL BE MADE AVAILABLE UPON REQUEST. CONTRACTOR SHALL PROVIDE ADEQUATE INSURANCE FOR PERSONNEL AND SHALL REPAIR ANY DAMAGE OCCURRING AS THE RESULT OF THIS PROJECT SITE AND RELATED PROPERTY.
3. ALL WORK SHALL BE PERFORMED IN A PROFESSIONAL MANNER IN ACCORDANCE WITH THE 2020 NATIONAL ELECTRICAL CODE, LIFE SAFETY CODE NFPA 101, ADA CODE, GA ACCESSIBILITY CODE, STATE OF GEORGIA ENERGY CODE AND ALL OTHER APPLICABLE CODES AND ORDINANCES.
4. ALL PERMITS AND FEES SHALL BE OBATINED AND PAID FOR BY THE CONTRACTOR.
5. ALL EQUIPMENT, MATERIAL, AND DEVICES SHALL BE LISTED OR RECOGNIZED BY UNDERWRITER'S LABORATORY OR ELECTRICAL TESTING LABORATORY AND USED AND INSTALLED IN ACCORDANCE WITH IT'S LISTING.
6. ALL WORK PERFORMED SHALL BE WARRANTED FOR A PERIOD OF ONE YEAR FROM THE THE FINAL COMPLETION DATE EXCEPT FOR FUSES AND LAMPS IN LIGHT FIXTURES. UPON NOTIFICATION OF A PROBLEM, THE CONTRACTOR SHALL INVESTIGATE THE PROBLEM WITHIN 48 HOURS UNLESS A DIFFERENT TIME PERIOD IS AGREED TO. THE CONTRACTOR SHALL INVESTIGATE, REPAIR OR REPLACE ALL FAULTY EQUIPMENT WITHIN A REASONABLE TIME PERIOD WITHOUT CHARGE TO THE OWNER.
7. THE TERM "PROVIDE" SHALL BE UNDERSTOOD TO MEAN, OBTAIN THE ITEM DESCRIBED, INSTALL ITEM IN ACCORDANCE WITH THESE PLANS, SPECIFICATIONS, AND MANUFACTURER'S RECOMMENDATIONS.
8. ALL PENETRATIONS MADE IN FIRE RATED BUILDING PORTIONS SHALL BE SEALED WITH A LISTED RESISTANT MATERIAL SUITABLE FOR THE APPLICATION.
9. ALL INSTALLATIONS OF ELECTRICAL EQUIPMENT AND MATERIALS SHALL BE COORDINATED WITH OTHER TRADES PRIOR TO INSTALLATION.
10. PLANS ARE DIAGRAMMATIC AND SHOW THE LOCATION OF THE EQUIPMENT, RACEWAY AND FIXTURES, AND ARE NOT TO BE SCALED. ALL DIMENSIONS SHALL BE VERIFIED AT THE BUILDING SITE.
11. CONTRACTOR SHALL VERIFY AND COORDINATE ALL EQUIPMENT AND DEVICE LOCATIONS WITH OWNER'S PROJECT MANAGER PRIOR TO INSTALLATION.
12. EQUIPMENT BREAKER AND WIRING REQUIREMENTS; THE CONTRACTOR SHALL SUBMIT FOR REVIEW A TABULATED SHEET OF BREAKER AND WIRING REQUIREMENTS FOR ALL MECHANICAL EQUIPMENT REQUIRING POWER AS SPECIFIED IN DIVISION 23. REQUIREMENTS SHALL BE IDENTIFIED BY HORSEPOWER OR KW, OPERATING AMPERAGE, REQUIRED VOLTAGE AND PHASE REQUIREMENTS, AND MANUFACTURERS SUGGESTED OVERCURRENT CIRCUIT PROTECTION DEVICE SIZE AND MINIMUM CIRCUIT AMPACITY SIZE. WHERE THE ELECTRICAL REQUIREMENTS SUBMITTED FOR MECHANICAL EQUIPMENT DIFFERS FROM THE BRANCH CIRCUITRY SHOWN ON THE ELECTRICAL DRAWINGS (WHEN USING THE BASIS OF DESIGN UNIT LISTED IN THE MECHANICAL SCHEDULES/SPECIFICATIONS OR A SIMILAR UNIT OF THE SAME SIZE FROM LISTED ALTERNATE MANUFACTURERS), THE CONTRACTOR SHALL MAKE THE NECESSARY ADJUSTMENTS TO THE BRANCH CIRCUITRY PER THE CURRENT NEC AT NO ADDITIONAL COST TO THE OWNER. WHEN CHANGES ARE MADE TO POWER REQUIREMENTS FOR EQUIPMENT DUE TO OWNER. ARCHITECT/ENGINEER APPROVED VALUE ENGINEERING CHANGES TO EQUIPMENT, THE COST MUST NE INCLUDED IN THE VALUE ENGINEERING OVERALL CHANGE ORDER COST. COSTS DUE TO ADJUSTMENTS IN BRANCH CIRCUITRY TO EQUIPMENT DUE TO VALUE ENGINEERING CHANGES WILL NOT BE ALLOWED AFTER THE OVERALL VALUE ENGINEERING CHANGE ORDER HAS BEEN APPROVED. IN ALL CASES, BREAKER AND WIRING REQUIREMENTS FOR MECHANICAL EQUIPMENT MUST BE PROVIDED TO THE ENGINEER BEFORE OR AT THE SAME TIME AS THE SHOP DRAWINGS FOR THE ELECTRICAL DISTRIBUTION GEAR OR EQUIPMENT. IN NO CASE SHALL THE ELECTRICAL DISTRIBUTION GEAR OR EQUIPMENT BE ORDERED OR BRANCH CIRCUITRY ROUGHED IN PRIOR TO ENGINEER REVIEW AND COMMENT ON THIS DOCUMENT. ANY EQUIPMENT ORDERED OR BRANCH CIRCUITRY ROUGHED IN ON THE JOBSITE WITHOUT THIS REVIEW AND COMMENT WILL BE TOTALLY AT THE CONTRACTORS RISK.

SECTION B: BASIC MATERIALS

1. ALL CONDUCTORS USED FOR 600 VOLTS OR LESS SHALL BE HIGH GRADE COPPER CONDUCTORS WITH 75 DEGREE C, THHN OR THWN THERMOPLASTIC INSULATION. ALL CONDUCTORS SHALL BE MADE IN THE USA. ALL CONDUCTORS ROUTED IN UNDERGROUND CONDUIT SHALL BE RATED FOR WET LOCATIONS.
2. ALL INTERIOR 120/277 VOLT, 20 AMP POWER AND LIGHTING WIRING SHALL BE INSTALLED IN ELECTRICAL METALLIC TUBING OR "MC" CABLE (IF NOT EXPOSED) FOR ALL INTERIOR CIRCUITS UNLESS OTHERWISE NOTED. IF "MC" CABLE IS USED, HOMERUNS SHALL BE IN 3/4 IN. EMT. POWER CIRCUITS FOR HVAC EQUIPMENT SHALL BE IN 3/4" ELECTRICAL METALIC CONDUIT MINIMUM. ALL CONDUIT SHALL BE SUPPORTED FROM BUILDING STRUCTURE. IT SHALL NOT BE SUPPORTED FROM DUCTWORK, PIPING, CEILING GRID OR CEILING GRID SUPPORTS, OR ANY OTHER NON-STRUCTURAL ITEM. CONDUIT SHALL BE SUPPORTED IN ACCORDANCE WITH THE NEC. CONDUIT IN EXPOSED STRUCTURE AREAS SHALL BE EMT. GALVANIZED RIGID STEEL CONDUIT SHALL BE USED IN AREAS WHERE IT WILL BE EXPOSED TO PHYSICAL DAMAGE.
3. CONDUIT UNDERGROUND SHALL BE SCHEDULE 40 PVC. IF MORE THAN ONE CONDUIT IS PROVIDED IN A SINGLE TRENCH, THE CONDUIT SHALL BE RACKED WITH SPACERS EVERY FOUR FEET TO MAINTAIN A MINIMUM SPACING BETWEEN CONDUIT OF TWO INCHES. BACKFILL USED FOR UNDERGROUND INSTALLATIONS SHALL BE FREE OF FOREIGN MATTER. WHERE EXPOSED TO WEATHER, CONDUIT SHALL BE GALVANIZED RIGID STEEL OR INTERMEDIATE METALLIC CONDUIT. THE CONDUIT SHALL BE TERMINATED WITH LISTED FITTINGS AND ALL CONDUIT ENDS SHALL BE REAMED AND SMOOTH. ALL CONDUIT ENDS IN BOXES SHALL BE PROVIDED WITH INSULATED BUSHINGS.
4. A #12 INSULATED COPPER GROUND CONDUCTOR SHALL BE INCLUDED IN ALL BRANCH CIRCUITS RATED 20 AMPERES. ALL OTHER CIRCUITS AND FEEDERS WILL BE PROVIDED WITH AN INSULATED COPPER CONDUCTOR SIZED AS NOTED OR IN ACCORDANCE WITH THE NEC, WHICHEVER IS GREATER.
5. THE MINIMUM SIZE OF ALL CONDUCTORS NOT OTHERWISE INDICATED IS #12 AND THE MINIMUM SIZE OF ALL CONDUIT UNLESS OTHERWISE INDICATED IS 1/2 IN.
6. ALL JUNCTION BOXES SHALL BE PROVIDED WITH COVERS AND ALL UNUSED OPENINGS SHALL BE PLUGGED. ALL JUNCTION BOXES SHALL BE INDEPENDENTLY SUPPORTED FROM STRUCTURE. COVERS OF BOXES SHALL BE LABELED WITH THE CIRCUIT NUMBER WITH A BLACK PERMANENT MARKER IN 3/4 IN. HIGH LETTERS (LEGIBLE HANDWRITTEN LETTERING IS ACCEPTABLE).
7. ALL OUTLET BOXES SHALL BE SQUARE METAL BOXES. PROVIDE PLASTER RINGS FOR ALL OUTLET BOXES CONTAINING DEVICES TO PROVIDE A FIRM MOUNTING SUPPORT FOR THE DEVICE.
8. ALL CONVENIENCE RECEPTACLES SHALL BE SPECIFICATION GRADE 20 AMP RECEPTACLES, OWNER TO SELECT COLOR. TAMPER RESISTANT (TYPE "TR").
9. ALL LIGHT SWITCHES SHALL BE SPECIFICATION GRADE 20 AMP TOGGLE SWITCHES FULL LOAD RATED FOR TUNGSTEN-HALOGEN LAMPS, OWNER TO SELECT COLOR.
10. PROVIDE FACEPLATES FOR ALL RECEPTACLES AND SWITCHES. COORDINATE STYLE AND COLOR WITH OWNER'S PROJECT MANAGER.
11. PROVIDE BETWEEN 12 AND 24 INCHES OF LIQUID TIGHT FLEXIBLE CONDUIT BETWEEN RIGID CONDUIT AND ANY EQUIPMENT CONTAINING MOTORS. THE FLEXIBLE CONDUIT SHALL BE SUPPORTED TO PREVENT THE CONDUIT FROM RESTING ON THE GROUND OR CONCRETE PAD.
12. PROVIDE WEATHERPROOF RECEPTACLE WITHIN 25 FEET OF EACH PIECE OF EXTERIOR EQUIPMENT. THIS RECEPTACLE SHALL BE MOUNTED HORIZONTALLY WITH METAL HINGED "IN USE" COVER MOUNTED TO OPEN UP. THIS OUTLET SHALL BE A GFCI RECEPTACLE. THIS RECEPTACLE SHALL BE BE MOUNTED IN DIE CAST NON CORRODING METAL BOX.
13. WHEN OUTLETS OR BOXES ARE INDICATED INSTALLED ON OPPOSITE SIDES OF THE SAME WALL. THE CONTRACTOR SHALL ADJUST THE LOCATION TO OFFSET THE OUTLETS WITH A WALL STUD PROVIDING SEPERATION.

SECTION C: DISTRIBUTION EQUIPMENT

1. CONTRACTOR SHALL PROVIDE CONDUCTORS AND CONDUIT FOR ALL FEEDERS IN ACCORDANCE WITH THE PLANS.
2. SEPERATELY MOUNTED CIRCUIT BREAKERS SHALL BE MOUNTED IN NEMA TYPE 1 ENCLOSURES IN INDOOR APPLICATIONS AND IN NEMA 3R ENCLOSURES IN EXTERIOR OR WET LOCATIONS. ALL CIRCUIT BREAKER ENCLOSURES SHALL BE PROVIDED WITH HINGED COVERS AND PROVISIONS FOR PADLOCKING THE COVERS.
3. ALL EQUIPMENT CONTAINING MOTORS SHALL BE PROVIDED WITH A DISCONNECTING MEANS WITHIN TEN FEET OF THE UNIT UNLESS OTHERWISE NOTED. THIS DISCONNECTING MEANS SHALL AS A MINIMUM BE A NON-FUSED SWITCH OR TOGGLE STARTER SIZED TO MATCH THE EQUIPMENT. PROVIDE OTHER DEVICES AS NOTED ON THE PLANS. PROVIDE NEMA TYPE 1 ENCLOSURES INDOORS AND NEMA 3R OUTDOORS.
4. PROVIDE GFCI CIRCUIT BREAKERS AND RECEPTACLES AS INDICATED ON THE PLANS AND IN THESE SPECIFICATIONS. THESE DEVICES SHALL BE CLASS A GFCI DEVICES.
5. PROVIDE PANELS AS SCHEDULED ON PLANS. CIRCUIT BREAKERS SHALL BE THERMAL-MAGNETIC BREAKERS WITH A MINIMUM INTERRUPTING RATING OF 10,000 AIC FOR 120/208V AND 14,000 AIC FOR 277/480V OR AS INDICATED ON THE PLANS. BREAKERS SHALL HAVE 65/75 DEGREE C RATED TERMINATIONS. PANEL NOTED SHALL BE SERVICE ENTRANCE RATED. MOUNT PANELS WITH TOP OF PANEL 6 FT. ABOVE FLOOR, PROVIDE 3/4 IN., GREY PAINTED PLYWOOD BACKBOARD FOR ALL PANELS SECURED TO WALL WITH 1/4 IN. TOGGLE BOLTS. PANEL MANUFACTURERS: SQUARE D, GENERAL ELECTRIC (GE), SEIMENS, AND EATON. ALL CURRENT CARRYING PARTS SHALL BE COPPER.
6. SYSTEM COORDINATION. THE MANUFACTURER OF THE PANELBOARDS SHALL PROVIDE SERIES RATED EQUIPMENT BASED ON U.L. LISTED TEST RESULTS. THE CONTRACTOR SHALL VERIFY THE AVAILABLE SHORT CIRCUIT CURRENT AT THE SERVING TRANSFORMER.
7. PROVIDE EACH PANELBOARD WITH A TYPEWRITTEN CIRCUIT BREAKER DIRECTORY CARD INSIDE A PLASTIC COVERING (EVERY CIRCUIT AND CIRCUIT MODIFICATION SHALL BE LEGIBLY IDENTIFIED AS TO ITS CLEAR, EVIDENT, AND SPECIFIC PURPOSE OR USE. THE INDETIFICATION SHALL INCLUDE SUFFICIENT DETAIL TO ALLOW EACH CIRCUIT TO BE DISTINGUISHED FROM ALL OTHERS). THE DIRECTORY AND COVERING SHALL BE LOCATED INSIDE A STEEL FRAME PROVIDED INSIDE THE DOOR OF EACH PANELBOARD. THE DIRECTORY SHALL BE TYPED TO IDENTIFY THE LOAD FED BY EACH CIRCUIT BREAKER AND THE AREAS SERVED.
8. PROVIDE NAMEPLATES FOR ALL PANELBOARDS, DISCONNECT SWITCHES, ENCLOSED CIRCUIT BRAKERS, COMBINATION STARTERS, CONTACTORS, AND ALL OTHER ELECTRICAL DISTRIBUTION EQUIPMENT PANELS. MOUNT NAMEPLATES ON EXTERIOR OF THE DOOR OF ALL SURFACE MOUNTED PANELS AND EQUIPMENT. NAME PLATES SHALL BE LAMINATED PLASTIC PLATES WITH 3/16 IN. HIGH WHITE LETTERS ETCHED ON BLACK BACKGROUND. NAME PLATES SHALL BE INSTALLED PARALLEL TO EQUIPMENT LINES. THE NAME OR USEAGE OF EACH DEVICE OR BRANCH CIRCUIT SHALL BE ETCHED IN THE NAMEPLATE. CONTRACTOR TO COORDINATE EXACT EQUIPMENT IDENTIFICATION WITH THE OWNER. SECURE NAMEPLATES VIA EPOXY GLUE.

SECTION D: LIGHTING

1. TYPES AND SPECIFIC REQUIREMENTS ARE PROVIDED ON THE LIGHTING FIXTURE SCHEDULE ON THE PLANS. ALL LIGHT FIXTURES SHALL BE PROVIDED WITH LAMPS, DRIVERS, BALLASTS, AND FULLY FUNCTIONING AT COMPLETION OF PROJECT.
2. ALL LED FIXTURES SHALL BE U.L. LISTED AND HAVE A MINIMUM OF 5 YEAR ON-SITE REPLACEMENT WARRANTY FOR DEFECTIVE OR NON-STARTING LED SOURCE ASSEMBLIES, DRIVERS, AND FOR LUMINAIRES EXHIBITING INADEQUATE LUMEN OUTPUT. IT SHALL COVER MATERIAL, FIXTURE FINISH, WORKMANSHIP, AND SHIPPING. ON-SITE REPLACEMENT SHALL INCLUDE TRANSPORTATION, REMOVAL, AND INSTALLATION OF NEW FIXTURE.
3. RATED LUMINAIRE WATTAGE SHALL BE ACTUAL, ACCOUNTING FOR ANY REDUCTION IN EFFICIENCY DUE TO SUB-OPTIMAL LOADING OF DRIVERS.
4. DRIVERS SHALL BE CAPABLE OF ACCEPTING THE VOLTAGE INDICATED ON THE LIGHTING FIXTURE SCHEDULE AND CAPABLE OF DIMMING IF REQUIRED. DRIVERS SHALL HAVE A CLASS A RATING, TOTAL HARMONIC DISTORTION OF LESS THAN 20%, AND SHALL NOT CONTAIN ANY POLYCHLORINATED BIPHENYL (PCB).
5. ALL LED FIXTURES SHALL BE TESTED TO IES LM-79 AND IES LM-80 STANDARDS. OUTDOOR FIXTURES SHALL BE IP65 RATED. LED'S, DRIVERS AND ALL COMPONENTS SHALL HAVE A SYSTEM LIFETIME OF 50,000 HOURS OR MORE AT 25 DEGREES CELSIUS AND SHALL MAINTAIN A MINIMUM OF 85% OF INITIAL LUMEN OUTPUT AFTER 55,000 HOURS OF OPERATION. LED'S SHALL HAVE COLOR RENDERING INDEX (CRI) OF 80 OR GREATER.
6. ALL SURFACE MOUNTED FIXTURES SHALL BE INDEPENDENTLY SUPPORTED FROM STRUCTURE. ALL CEILING MOUNTED FIXTURES SHALL BE SUPPORTED FROM STRUCTURE AND BRACED TO PREVENT MOVEMENT IF IMPACTED.
7. ALL RECESSED FIXTURES IN LAY IN TYPE CEILINGS SHALL BE PROVIDED WITH GRID CLIPS TO FASTEN FIRMLY TO CEILING SUPPORT GRID. THE CEILING GRID SHALL BE SUPPORTED AT EACH CORNER OF A FIXTURE.
8. CONNECTION TO ALL FIXTURES IN LAYIN CEILING SHALL BE BY FLEXIBLE CONDUIT OF FOUR TO SIX FEET IN LENGTH. A GROUND CONDUCTOR WILL BE INCLUDED WITH THIS CONNECTION.
9. ALL LENSES ON FIXTURES SHALL BE 0.125 INCH THICK MINIMUM. ALL HOUSINGS SHALL BE 22 GAUGE STEEL MIN. AND HAVE A POST FABRICATION HIGH REFLECTIVE WHITE FINISH.

SECTION E: FIRE ALARM SYSTEM (EXISTING SYSTEM FROM PHASE I)

1. MATCH EXISTING MANUFACTURER (FROM PHASE I SYSTEM) FOR ALL NEW DEVICES.
2. PROVIDE THE EXTENSION OF AN EXISTING COMPLETE OPERABLE VOICE EVAC FIRE ALARM SYSTEM FOR THIS PROJECT. VERIFY THE EXACT LOCATION OF THE MAIN PANEL FROM PHASE I. THE FIRE ALARM SYSTEM SHALL BE DESIGNED FOR CLASS B OPERATION. THE WIRING FOR THE FIRE ALARM SYSTEM SHALL BE INSTALLED IN 1/2 IN. ELECTRICAL METALLIC TUBING. PROVIDE INSULATED FITTINGS ON ALL CONDUIT ENDS. THE FIRE ALARM SHALL BE MADE IN THE USA AND BE UL LISTED. ALL WIRING AND DEVICES FOR THE SYSTEM SHALL BE SUPERVISED. COLOR CODE THE CONDUIT EVERY 24 IN. WITH RED MARKINGS (EXCEPT WHERE EXPOSED).
3. NEW DEVICES SHALL BE PROVIDED WITH RECESSED METAL BOXES. ALL DEVICES SHALL BE MOUNTED FLUSH WITH WALL EXCEPT FOR PULL STATIONS WHICH SHALL BE SEMI-FLUSH.
4. NEW HORN/STROBE AND SPEAKER/STROBE DEVICES SHALL MEET THE REQUIREMENTS OF THE AMERICANS WITH DISABILITIES ACT. THE SPEAKER SHALL PRODUCE A SOUND LEVEL OF 90 DECIBELS AND THE STROBE SHALL PRODUCE A FLASHING PULSE OF LIGHT OF 75 CANDELA. BOTH SOUND PRESSURE AND STROBE INTENSITY SHALL BE FIELD SELECTABLE AND ADJUSTABLE.
5. STROBE DEVICES SHALL PRODUCE A FLASHING PULSE OF LIGHT OF 75 CANDELLA.
6. NEW PULL STATIONS SHALL BE NON-GLASS-BREAK TYPE AND KEYED THE SAME AS THE FIRE ALARM PANEL.
7. THE SMOKE DETECTORS SHALL BE THE PHOTOELECTRIC TYPE POWERED FROM THE MAIN FIRE ALARM PANEL.
8. THE GENERAL BUILDING ALARM WILL SOUND WHEN ACTIVATED AT THE CONTROL PANEL, BY SMOKE OR HEAT DETECTORS, OR BY A PULL STATION. ALARM WILL ALSO SOUND WHEN ACTIVATED BY A DUCT SMOKE DETECTOR OR SPRINKLER.
11. PROVIDE REMOTE ANNUNCIATOR PANEL AS SHOWN ON PLANS. THE ANNUNCIATOR PANEL SHALL BE PROVIDED WITH AN LCD DISPLAY AND COMPLETE CONTROL PUSH BUTTONS INCLUDING, BUT NOT LIMITED TO, ALARM ACKNOWLEDGE, ALARM SILENCE, RESET, ETC.
12. PROVIDE PHOTO ELECTRIC TYPE DUCT MOUNTED SMOKE DETECTORS WHERE SHOWN IN HVAC SUPPLY DUCT. UNIT SHALL HAVE SAMPLING TUBES THAT EXTEND THE WIDTH OF THE DUCT. PROVIDE REMOTE INDICATOR ACCESSIBLE IN NEAREST MECH/ELEC ROOM FOR EACH DETECTOR, WHICH WILL INDICATE WHICH DETECTOR IS ACTIVATED.
13. NEW HEAT DETECTORS SHALL BE COMBINATION TYPE, RATE OF RISE AND FIXED TEMP, SET INITIALLY TO MINIMUM 135 DEGREES F, AND SHALL BE RATED FOR 200 DEGREES F.
14. SEE FIRE ALARM SUBCONTRACTOR SUBMITTAL TO AUTHORITY HAVING JURISDICTION ON SHEET E-4.1 FOR ADDITIONAL REQUIREMENTS. FIRE ALARM SUBCONTRACTOR IS RESPONSIBLE FOR ALL ADDITIONAL DEVICES AND EQUIPMENT AS REQUIRED TO MEET ALL NFPA, IBC, GEORGIA STATE, AND LOCAL CODES.

LIGHTING FIXTURE SCHEDULE

TYPE	DESCRIPTION	MANUFACTURER
A	2 FT. X 4 FT. RECESSED CONTEMPORARY LOW PROFILE ARCHITECTURAL TROFFER WITH ACRYLIC CENTER LENS AND MATTE WHITE POWDER PAINT REFLECTOR; STANDARD 0-10 DIMMING. PROVIDE 90 MINUTE EMERGENCY BATTERY PACK WHERE INDICATED ON THE DRAWINGS AND WIRE BATTERY IN PARALLEL FOR SWITCHED OPERATION. LAMPS: LED, 4000 LUMENS, 34 WATTS, 3500 DEGREE K DRIVER: UNV. VOLT	LITHONIA "STACK" SER., METALUX "CRUZE ST" SER., COLUMBIA "LCAT" SER., OR APPROVED EQUAL
B	4 FT. LED STRIPLIGHT WITH DIFFUSE ACRYLIC LENS, SURFACE/PENDANT MOUNTED, STANDARD 0-10 DIMMING. PROVIDE 90 MINUTE EMERGENCY BATTERY PACK WHERE INDICATED ON THE DRAWINGS. PROVIDE 90 MINUTE EMERGENCY BATTERY PACK WHERE INDICATED ON THE DRAWINGS AND WIRE BATTERY IN PARALLEL FOR SWITCHED OPERATION. LAMPS: LED, 4300 LUMENS, 36 WATTS, 3500 DEGREE K DRIVER: UNV. VOLT	METALUX "SNL" SER., LITHONIA "CSS" SER., COLUMBIA "CSL" SER., OR APPROVED EQUAL
C	6 IN. ROUND COMMERCIAL GRADE CYLINDER, PENDANT MOUNTED, MEDIUM DISTRIBUTION, 0-10V DIMMING STANDARD. COORDINATE COLOR AND STEM LENGTH WITH ARCHITECT. PROVIDE MOUNTING CANOPY AS REQUIRED. PROVIDE 90 MINUTE EMERGENCY BATTERY PACK WHERE INDICATED ON THE DRAWINGS AND WIRE BATTERY IN PARALLEL FOR SWITCHED OPERATION. LAMPS: LED, 1500 LUMENS, 18 WATTS, 3500 DEGREE K DRIVER: UNV. VOLT	HALO COMMERCIAL "HCC6" SER., LITHONIA "LDN6" SER., RAYON "RFL-6" SER., OR APPROVED EQUAL
D	COMMERCIAL DOWNLIGHT, RECESSED SELF FLANGED, 6 IN. APERTURE CLEAR SPECULAR LOW IRIDESCENT REFLECTOR; ACCESS FROM BELOW OR ABOVE CEILING; NEW CONSTRUCTION HOUSING; STANDARD 0-10 DIMMING. PROVIDE 90 MINUTE EMERGENCY BATTERY PACK WHERE INDICATED ON THE DRAWINGS AND WIRE BATTERY IN PARALLEL FOR SWITCHED OPERATION. LAMPS: LED, 1500 LUMENS, 19 WATTS, 3500 DEGREE K DRIVER: UNV. VOLT	LITHONIA "LBR6" SER., HALO COMMERCIAL "HC6" SER., PRESCOLITE "LFR-6RD" SER., OR APPROVED EQUAL
E	TRADITIONAL CONE STYLE HEAD WITH INTEGRAL DRIVER, SINGLE CIRCUIT, TRACK LENGTH AS SHOWN, 350 DEGREE HORIZONTAL / 90 DEGREE VERTICAL AIMING. (4) FLOOD DISTRIBUTION HEADS PER TRACK. PROVIDE 1 AMP CURRENT LIMITING FEED UNIT, DIMMING STANDARD. SUSPEND TRACK TO BE 10'-0" A.F.F. COORDINATE FINISH WITH OWNER. LAMPS: LED, 850 LUMENS, 10 WATTS, 3500 DEGREE K DRIVER: DIMMING 120 VOLT DRIVER INTEGRAL WITH 1 AMP CURRENT LIMIT FOR TRACK	JUNO "R600L" SER., WAC LIGHTING "LUCIO 6010" SER., OR APPROVED EQUAL
F	LED FLEXIBLE ENCAPSULATED UPLIGHT FIXTURE, STANDARD 0-10 DIMMING. PROVIDE LENGTHS AS SHOWN ON THE DRAWINGS. MODEL NUMBER: KURV-SW-WSC-DRY-35-3.0-ENC/CL-P1-BW-BW-N/A LAMPS: LED, 213 LUMENS/FT., 3 WATTS/FT., 3500 DEGREE K DRIVER: UNV. VOLT	Q-TRAN "Q-CAP KURV" SER., OR APPROVED EQUAL
G	4 FT. LED STRIPLIGHT WITH EXTRUDED ROUND ACRYLIC LENS, PENDANT MOUNTED, STANDARD 0-10 DIMMING. PROVIDE 90 MINUTE EMERGENCY BATTERY PACK WHERE INDICATED ON THE DRAWINGS AND WIRE BATTERY IN PARALLEL FOR SWITCHED OPERATION. COORDINATE FINISH WITH OWNER. LAMPS: LED, 3600 LUMENS, 36 WATTS, 3500 DEGREE K DRIVER: UNV. VOLT	PRUDENTIAL LIGTHING "SNAP" SER., BARTCO "BSS205" SER., AXIS LIGHTING "AIR LED" SER., OR APPROVED EQUAL
OA	ARCHITECTURAL WALL PACK WITH DIE-CAST ALUMINUM HOUSING; WET LOCATION LISTED. COORDINATE FINISH WITH OWNER. PROVIDE 90 MINUTE EMERGENCY BATTERY PACK WHERE INDICATED ON THE DRAWINGS AND WIRE BATTERY IN PARALLEL FOR SWITCHED OPERATION. COORDINATE FINISH WITH OWNER. LAMPS: LED, 6500 LUMENS, 51 WATTS, 4000 DEGREE K DRIVER: UNV. VOLT	LITHONIA "ARC2" SER., MCGRAW "IST" SER., BEACON "TRP2" SER., OR APPROVED EQUAL
OB	COMMERCIAL GRADE DOWNLIGHT, RECESSED SELF FLANGED, 6 IN. ROUND APERTURE, SPECULAR REFLECTOR FINISH; MEDIUM DISTRIBUTION; STANDARD 0-10 DIMMING. LAMPS: LED, 2000 LUMENS, 23 WATTS, 4000 DEGREE K DRIVER: UNV. VOLT	HALO COMMERCIAL "HC6" SER., LITHONIA "LDN6" SER., PRESCOLITE "LFR-6RD" SER., OR APPROVED EQUAL
OC	LED EXTERIOR STEP LIGHT; RECESSED BACK BOX WITH FLAT FACEPLATE; WET LOCATION LISTED. COORDINATE FINISH WITH OWNER. LAMPS: LED, 300 LUMENS, 8 WATTS, 4000 DEGREE K DRIVER: UNV. VOLT	HYDREL "HSL13" SER., BEGA "33054" SER., COLE "L606W-AL-HO" SER., OR APPROVED EQUAL
OD	LED FLEXIBLE ENCAPSULATED FIXTURE, SUFRACE MOUNTED WITH ALUMINUM EXTRUSION; WET LOCATION LISTED. PROVIDE LENGTHS AS SHOWN ON THE DRAWINGS. MODEL NUMBER: FLQ-SW-S-40-90-1.4-IM-FC-1'-IM-FC-1'. LAMPS: LED, 55 LUMENS/FT., 1.4 WATTS/FT., 4000 DEGREE K DRIVER: UNV. VOLT	Q-TRAN "FLQ-SW" SER., OR PRIOR APPROVED EQUAL
	LED THERMOPLASTIC EXIT, IMPACT/SCRATCH RESISTANT AND CORROSION PROOF; TOP, END, OR BACK MOUNTING STANDARD. UNIVERSAL FIELD SELECTABLE SINGLE OR DOUBLE FACE. (PROVIDE 90 MIN. BACK-UP BATTERY). LAMPS: LED, 3 WATTS BALLAST: UNV. VOLT	LITHONIA "LQM" SER., SURE-LITES "LPX" SER., COMPASS "CE" SER., OR APPROVED EQUAL
	ARCHITECURAL LOW PROFILE OUTDOOR LED AC/EMERGENCY UNIT, SELF DIAGNOSTICS STANDARD. (PROVIDE 90 MIN. BACK-UP BATTERY). LAMPS: LED, 3 WATTS BALLAST: UNV. VOLT	EMERGI-LITE "LUX-RAY" SER., LITHONIA "AFO" SER., MULE "MAKO" SER., OR APPROVED EQUAL

LIGHTING FIXTURE SCHEDULE
NOTES:
1. CONTRACTOR TO VERIFY ALL VOLTAGES, GRID AND CEILING TYPES WITH THE ARCHITECT AND COORDINATE FIXTURE DIMENSION SIZE TO ENSURE A PROPER FIT IN ALL CEILING TYPES PRIOR TO ORDERING.
2. ALL LUMENS LISTED ARE DELIVERED LUMENS. ALL EQUALS TO SPECIFIED FIXTURES SHALL NOT BE ANY LOWER THAN 5% OF SPECIFIED LUMENS. WATTAGE SHALL NOT BE HIGHER THAN 15% OF SPECIFIED WATTAGE.
3. LISTING OF MANUFACTURERS DOES NOT EQUAL AUTOMATIC APPROVAL. ALL CHARACTERISTICS NOTED IN DESCRIPTION SECTION MUST BE MET IN ORDER TO BE APPROVED. WHERE VENDOR/REP. DOES NOT HAVE ONE MANUFACTURER LISTED, PRIOR APPROVAL IS REQUIRED TO BE SUBMITTED TO ENGINEER TEN (10) DAYS PRIOR TO BID.

GENERAL NOTES:

A. ALL FLUSH RECESSED OUTLET BOXES SHALL BE INSTALLED SUCH THAT FRONT EDGE OF THE BOX WILL NOT BE SET BACK OF THE FINISHED SURFACE MORE THAN 1/4 IN. IN ORDER TO COMPLY WITH N.E.C. 314-20. SUPPORT OF OUTLET BOX BY RECEPTACLE AND COVERPLATE IS NOT ACCEPTABLE. CAREFULLY COORDINATE ROUGH-IN WITH BLOCK MASONS AND GROUT-IN CELL CONTAINING OUTLET BOX.

B. DO NOT SCALE DRAWINGS TO LOCATE EQUIPMENT OR OUTLETS. MOUNTING HEIGHTS AS INDICATED ON THE DRAWINGS SHALL BE FROM THE FINISHED FLOOR TO THE CENTER LINE OF THE OUTLET BOX.

C. THE ELECTRICAL DRAWINGS ARE ONLY A PART OF THE CONTRACT DOCUMENTS. ALL OF THE DRAWINGS AND SPECIFICATIONS MUST BE REVIEWED FOR THEIR INTERRELATIONSHIP AND REQUIRED COORDINATION BETWEEN DISCIPLINES.

D. ALL RECEPTACLES SHALL BE TAMPER RESISTANT (TYPE "TR").

E. PROVIDE BLANK COVER PLATES ON ALL BOXES WHERE NO DEVICE IS PRESENT, INCLUDING EMPTY BOXES AND/OR BOXES THAT MIGHT HAVE CABLES THAT ARE NOT TERMINATED.

ALPHA BLDG SET 08-27-2024

PROVIDE ALL BRANCH CIRCUIT CONDUIT/CONDUCTORS AS NECESSARY TO CONNECT ALL DEVICES SHOWN ON THE CIRCUIT. PROVIDE DEDICATED NEUTRALS FOR ALL CIRCUITS. (STRIPED NEUTRAL WITH PHASE COLOR STRIPING)

ELECTRICAL LEGEND

LIGHTING AND POWER

	CONDUIT RUN CONCEALED ABOVE CEILING OR IN WALL, HASH MARKS INDICATE NUMBER OF CONDUCTORS. (3 WIRE UNLESS SHOWN)
	CONDUIT RUN CONCEALED BELOW FLOOR SLAB, OR UNDERGROUND.
A-2,4	HOMERUN TO PANELBOARD, LETTER OR LETTERS INDICATE PANELBOARD. NUMBERS INDICATES CIRCUIT NUMBERS.
	EXPOSED CONDUIT RUN.
	LIGHT FIXTURE, SEE LIGHTING FIXTURE SCHEDULE FOR MOUNTING AND TYPE.
	LIGHT FIXTURE, SEE SCHEDULE FOR MOUNTING AND TYPE. PROVIDE WITH 1100 LUMEN, 90 MINUTE BATTERY PACK. FIXTURE NORMALLY SWITCHED WITH OTHER FIXTURES IN THIS AREA.
	UNSWITCHED NIGHT LIGHT FIXTURE, SEE SCHEDULE FOR MOUNTING AND TYPE. PROVIDE WITH 1100 LUMEN, 90 MINUTE BATTERY PACK.
	LIGHTING FIXTURE, WALL BRACKET MOUNTED. (MOUNTING HEIGHT AS NOTED ON DRAWINGS OR AS SHOWN ON ARCHITECTURAL ELEVATIONS.)
J	JUNCTION BOX LOCATED ABOVE CEILING.
J	JUNCTION BOX, FLUSH WALL MOUNTED. AT 18 IN. TO CENTERLINE UNLESS OTHERWISE NOTED.
	CEILING MOUNTED OUTLET WITH ONE TWIST LOCK SIMPLEX OUTLET (NEMA L5-20) SUPPORT BOX BY 3/8 IN. THREADED ROD TO STRUCTURE. PROVIDE KELLUM STRAIN RELIEF GRIP AT BOX AND AT SUSPENDED OUTLET. SUSPEND TO 36 IN. A.F.F. COIL UP AND ZIP TIE AT 96 IN. A.F.F.
	DUPLEX CONVENIENCE OUTLET, +18 IN. TO CENTERLINE OF OUTLET UNLESS OTHERWISE NOTED.
	QUADRUPLEX OUTLET, 18 IN. TO CENTERLINE UNLESS OTHERWISE NOTED.
WP	DUPLEX CONVENIENCE OUTLET, GFI TYPE. 18 IN. TO CENTERLINE UNLESS OTHERWISE NOTED. "WP" WHERE SHOWN INDICATES WEATHERPROOF.
	DUPLEX CONVENIENCE OUTLET, GFI TYPE. MOUNTED ABOVE COUNTER. MOUNT AT 3 FT.- 4 IN. TO BOTTOM OF BOX.
$	SINGLE POLE TOGGLE SWITCH, 42 IN. A.F.F. MOUNTING HEIGHT.
$3 $4	THREE OR FOUR WAY SWITCH AS INDICATED. 42 IN. A.F.F. MOUNTING HEIGHT.
K	KEY SWITCH TO USE "CYLINDER" TYPE KEY. 42 IN. A.F.F. MOUNTING HEIGHT.
	0-10 VOLT SLIDE TYPE DIMMER 2015 IECC COMPLAINT, (MANUAL ON TO 50%, DIM 1-100%, AUTO OFF. MUST BE COMPATIBLE WITH POWER PACK.) 42 IN. ABOVE FLOOR.
3	THREE WAY, 0-10 VOLT SLIDE TYPE DIMMER, 42 IN. ABOVE FLOOR, 2015 IECC COMPLAINT, (MANUAL ON TO 50%, DIM 1-100%, AUTO OFF. MUST BE COMPATIBLE WITH POWER PACK.)
	PANELBOARD, SEE SCHEDULE.
T	TRANSFORMER, SEE RISER DIAGRAM FOR SIZE AND VOLTAGE.
	DISCONNECT SWITCH, SIZE AS NOTED ON DRAWINGS.

SOUND SYSTEM (RACEWAY AND BOXES ONLY)

S	SPEAKER, FLUSH WALL MOUNTED. PROVIDE OUTLET BOX AND 3/4 IN. C. TO AV ROOM.
V	VOLUME CONTROL, MOUNTED 42 IN. ABOVE FLOOR. PROVIDE OUTLET BOX AND 3/4 IN. C. TO AV ROOM.
SC	SOUND RACK/CONSOLE.
	MIC OUTLET. PROVIDE OUTLET BOX AND 3/4 IN. C. TO AV ROOM.

LIGHTING CONTROL SENSORS

3	COMBINATION 360 DEGREE, ULTRASONIC AND PASSIVE INFRARED SENSOR (WATT STOPPER "DT-300", GREENGATE, NOVITAS, HUBBELL, LEVITON, SENSOR SWITCH).
$0	WALL MOUNTED SENSOR SWITCH, 42 IN. MOUNTING HEIGHT (WATTSTOPPER DSW-301, GREENGATE, NOVITAS, HUBBELL, LEVITON, SENSOR SWITCH).

TELEPHONE/DATA/CATV SYSTEMS

	COMPUTER OUTLET, 18 IN. ABOVE FLOOR UNLESS NOTED OTHERWISE. (2 DATA)
	COMBINATION COMPUTER AND TELEPHONE OUTLET, MOUNTED 18 IN. TO CENTER LINE OF OUTLET UNLESS NOTED OTHERWISE. (2 DATA, 1 TEL)
	COMPUTER OUTLET, MOUNTED 8 INCHES ABOVE COUNTER OR AT 42. ABOVE FLOOR UNLESS NOTED OTHERWISE. (2 DATA)
AP	WIRELESS ACCESS POINT. (2 DATA)
TV	TELEVISION OUTLET, 18 IN. TO CENTER LINE OF OUTLET UNLESS NOTED OTHERWISE.
TB	PLYWOOD BACKBOARD, "TB" INDICATES TELEPHONE BOARD.

FIRE ALARM SYSTEM (VOICE EVAC SYSTEM)

FAA	FIRE ALARM REMOTE LCD ANNUNCIATOR PANEL. FLUSH RECESSED WALL MOUNTED.
MIC	REMOTE VOICE EVACUATION MICROPHONE, WALL MOUNTED IN FLUSH BOX, 42 IN. A.F.F.
	FIRE ALARM SIGNAL, HORN AND FLASHING LIGHT. 6 FT.-8 IN. MOUNTING HEIGHT.
	FIRE ALARM SIGNAL, SPEAKER AND FLASHING LIGHT. 6 FT.-8 IN. MOUNTING HEIGHT.
	FIRE ALARM STROBE LIGHT, 6 FT.-8 IN. MOUNTING HEIGHT.
F	FIRE ALARM PULL STATION. WALL MOUNTED 3 FT.-6 IN. ABOVE FLOOR.
P	FIRE ALARM SMOKE DETECTOR, CEILING MOUNTED.
	FIRE ALARM HEAT DETECTOR. 135 DEG. OPERATION.
	FIRE ALARM DUCT SMOKE DETECTOR LOCATED IN HVAC SUPPLY AIR DUCT. PROVIDE IN UNITS 2000 CFM AND GREATER. DETECTOR SHALL SHUT DOWN UNIT UPON ACTIVATION.

SECURITY SYSTEM (RACEWAY AND BOXES ONLY)

C	ACCESS CONTROL PROXIMITY READER, PROVIDE JUNCTION BOX AND 3/4 IN. C. WITH PULL STRING TO SECURITY EQUIPMENT LOCATION. COORDINATE WITH SECURITY CONTRACTOR PRIOR TO ROUGH-IN. COORDINATE MOUNTING HEIGHT WITH OWNER PRIOR TO ROUGH-IN. (RACEWAY AND BOXES ONLY)
DC	DOOR CONTACT POSITION SENSOR LOCATION. PROVIDE SINGLE GANG BOX AT DOOR FRAME ON SECURE SIDE OF DOOR. COORDINATE EXACT LOCATION WITH ACCESS CONTROL SYSTEM VENDOR. PROVIDE 3/4 IN. C. WITH PULL STRING TO STUB-OUT ABOVE CEILING.
	WALL MOUNTED CCTV SECURITY CAMERA. PROVIDE JUNCTION BOX AND 1 IN. C. WITH PULL STRING TO SECURITY EQUIPMENT LOCATION. COORDINATE MOUNTING HEIGHT WITH ARCHITECTURAL. (RACEWAY AND BOXES ONLY)

NOTES:
1. ALL MOUNTING HEIGHTS ARE FROM FINISHED FLOOR TO CENTERLINE OF OUTLET OR DEVICE.
2. ALL RECEPTACLES SHALL BE TAMPER RESISTANT (TYPE "TR").

PHASE 2

Seal: GEORGIA REGISTERED PROFESSIONAL ENGINEER JEFFREY H. McGEE

ELECTRICAL DESIGN CONSULTANTS, INC.
175 NEW ST., STE.1
MACON, GA 31201
EDC# M24004

This drawing may be utilized only for the purpose of constructing or installing the work shown thereon at the site of the work specified. Any other use of this drawing, including without limitation any reproduction or alteration of this drawing, without the prior written approval of Beta Design Group P.C. is prohibited.
© BETA DESIGN GROUP, P.C. 2014

Client: SUNBELT BUILDERS™
10641 HWY 36, COVINGTON, GA 30014, TEL: 770 786 3031

Project:
R. L. COUSINS CENTER
NEWTON CO. BOC RFP #24-04
8134 GEIGER STREET, N.W.
COVINGTON, GEORGIA.

Issue Date:	Initial:	Drwg. Revision Description:
06-27-24	TAW	FOR CONSTRUCTION
07-03-24	TAW	VE REVISION 1

Project No.: 2023012
Drwg. Date: 06/27/24
Drwg. Revision:
Drawn By: TAW
Checked By: JHM
File Name:

Sheet Title: ELECTRICAL SPECS, DETAILS, AND LEGENDS

Sheet No.: E-0.1

ELECTRICAL SPECIFICATIONS

ALPHA BLDG SET 08-27-2024

SECTION F: TELEPHONE/DATA SYSTEMS

WORK INCLUDED:

1. WORK SHALL INCLUDE PROVISIONS FOR A COMPLETE TELEPHONE/DATA CABLING SYSTEM INCLUDING: TELEPHONE/DATA COMBINATION OUTLETS, CABLING, CONDUIT, BOXES, TELEPHONE AND DATA PUNCH DOWN BLOCKS, J-HOOKS, LADDER TRAY, AND PLYWOOD BACKBOARDS.

SCOPE OF PROJECT, STANDARDS, AND DESCRIPTION:

1. THE CABLING AND WIRING PLACED FOR VOICE AND DATA COMMUNICATIONS ON THIS UNDERTAKING SHALL BE "UNSHIELDED TWISTED PAIR" TYPE AND CONFORM TO THE REQUIREMENTS CONTAINED IN THE LASTEST EDITIONS OF THE NATIONAL ELECTRIC CODE (NEC) AND THE LASTEST EDITIONS OF THE FOLLOWING AMERICAN NATIONAL STANDARDS INSTITUTE (ANSI) SPECIFICATIONS:

A. EIA-TIA-568 COMMERCIAL BUILDING TELECOMMUNICATIONS WIRING.
B. STANDARD B. EIA-TIA-569 COMMERCIAL BUILDING STANDARD FOR TELECOMM. PATHWAYS AND SPACES.
C. TIA/EIA-606 ADMINSTRATION STANDARD FOR THE TELECOMM. INFRASTRUCTURE OF COMMERCIAL BUILDINGS.
D. TIA/EIA-607 COMMERCIAL BUILDING GROUNDING AND BONDING REQUIREMENTS FOR TELECOMMUNICATIONS.
E. SUPPLEMENTS TO EIA/TIA-568 TECHNICAL SYSTEMS BULLETINS.
F. TSB-36 ADDITIONAL TRANSMISSION SPECIFICATIONS FOR UNSHIELDED TWISTED PAIR CABLES.
G. TSB-40 ADDITIONAL TRANSMISSION SPECIFICATIONS FOR UNSHIELDED TWISTED PAIR HARDWARE.

WORKMANSHIP:

1. ALL WORK SHALL BE PERFORMED IN A WORKMANLIKE MANNER. ARCHITECT, ENGINEER, AND/OR OWNER MAY OBSERVE THE WORK PROCEDURES AND WORKMANSHIP OF THE CONTRACTOR BUT SUCH OBSERVATION WILL NOT RELIEVE THE CONTRACTOR FROM RESPONSIBILITY FOR PERFORMANCE.

WARRANTY:
1. THE CONTRACTOR SHALL FURNISH A WRITTEN WARRANTY THAT DESCRIBES THE EQUIPMENT SUPPLIED UNDER THESE SPECIFICATIONS WILL BE FREE FROM DEFECTS OF MATERIALS AND WORKMANSHIP FOR A PERIOD OF FIVE YEARS AND THE CABLE PLANT/LABOR WILL BE FREE FROM DEFECTS OF MATERIALS AND WORKMANSHIP FOR A PERIOD OF FIVE YEARS FROM THE DATE OF FINAL ACCEPTANCE UNLESS OTHERWISE SPECIFIED AND THAT ALL DEFECTS OCCURING WITHIN THAT PERIOD SHALL BE CORRECTED IN A TIMELY MANNER AT NO COST TO THE OWNER.

CONTRACTOR'S QUALIFICATIONS:
1. CONTRACTOR SHALL BE REQUIRED, BEFORE AWARDING OF CONTRACT, TO DEMONSTRATE TO THE COMPLETE SATISFACTION OF THE ARCHITECT THAT HE HAS THE NECESSARY FACILITIES, ABILITY AND FINANCIAL RESOURCES TO EXECUTE THE WORK IN A SATISFACTORY MANNER AND WITHIN THE TIME SPECIFIED; THAT HE HAS HAD EXPERIENCE IN CONSTRUCTION WORK AS SAME OR SIMILAR NATURE; THAT HE HAS PAST HISTORY AND REFERENCES WHICH WILL ASSURE THE OWNER OF HIS QUALIFICATIONS FOR EXECUTING THE WORK.

2. CONTRACTOR SHALL SUBMIT A COPY OF A VALID LOW-VOLTAGE LICENSE (LOW-VOLTAGE GENERAL, LOW-VOLTAGE TELECOMMUNICATIONS OR LOW-VOLTAGE UNRESTRICTED AS ISSUED BY THE STATE CONSTRUCTION INDUSTRY LICENSING BOARD OF LOW-VOLTAGE CONTRACTORS).

3. CONTRACTOR SHALL SUBMIT A COPY OF BICSI (BUILDING INDUSTRY CONSULTING SERVICE INTERNATIONAL) CERTIFIED RCDD (REGISTERED COMMUNICATIONS DISTRIBUTIONS DESIGNER) CERTIFICATE.

4. COMPREHENSIVE LIST OF REFERENCES: ATTACH A DETAILED LIST OF REFERENCES ALONG WITH CONTACT PERSON, DATES OF WORK, MAILING ADDRESS, TELEPHONE NUMBERS.

5. CONTRACTOR MUST PROVIDE PROOF OF INSTALLATION IN A MINIMUM OF FIVE SITES USING AN CATEGORY 6 STRUCTURED CABLING WITH 100 OR MORE ACTIVE (WORKING) NODES INSTALLED.

SUBMITTALS:

1. SUBMIT PRODUCT DATA CONSISTING OF MANUFACTURER'S PUBLISHED LITERATURE AND AS SPECIFIED FOR:
A. LITERATURE FOR EACH SEPARATE TYPE OF EQUIPMENT BEING PROVIDED. INDICATE MODEL NUMBER ON CUTSHEET.

B. ONE LINE SCHEMATIC OF COMPLETE SYSTEM SHOWING A FLOOR PLAN TO SCALE. SHOW LOCATIONS AND THE TYPE OF OUTLETS, AS WELL AS ALL RACK LOCATIONS, AND CABLING TYPE.
C. DOCUMENTATION OF TESTING ON ALL WIRING AND TERMINATIONS AS PER EIA/TIA STANDARDS.

MAUFACTURERS:

1. ACCEPTABLE MANUFACTURERS FOR EACH TYPE OF EQUIPMENT SPECIFIED SHALL BE AS NOTED THROUGHOUT THIS SPECIFICATION SECTION.

2. THE ACCEPTABLE MANUFACTURERS NOTED SHALL BE INSTALLED BY THE AUTHORIZED LOCAL FACTORY DEALER/ REPRESENTATIVE FOR THAT PRODUCT.

3. THE CONTRACTOR SHALL HOLD A CURRENT LOW VOLTAGE CONTRACTOR'S LICENSE AND RCDD CERTIFICATE. ANY OTHER INTERESTED PARTIES SHALL SUBMIT A COMPANY RESUME SHOWING YEARS IN BUSINESS, CERTIFICATION STATING THAT HE IS AN AUTHORIZED REPRESENTATIVE FOR THE MANUFACTURER OF THE EQUIPMENT HE IS SUBMITTING FOR APPROVAL AND THAT HE MAINTAINS A FULLY EQUIPPED AND STOCKED SERVICE SHOP AND SHALL RESPOND TO SERVICE CALLS WITHIN 12 NORMAL WORKING HOURS, LIST OF KEY PERSONNEL, COPIES OF APPROPRIATE LICENSES AND LIST OF RECENTLY COMPLETED JOBS.

TELEPHONE/DATA JACK AND OUTLET SPECIFICATIONS:

1. LOCATIONS SHOWN ON DRAWINGS WILL BE EQUIPPED WITH A CONSISTENT ARRANGEMENT OF LAN COMMUNICATIONS OUTLETS. PROVIDE JACKS IN OUTLETS (AS DETAILED ON DRAWING). PROVIDE COLORED ICONS AS INDICATED ON DRAWINGS.
2. OUTLET FACEPLATE FOR THIS ARRANGEMENT SHALL BE CONFIGURED IN THE FOLLOWING FASHION:

A. THE JACKS USED SHALL FIT PROPERLY IN THE OUTLET OPENINGS OF THE OUTLET FACEPLATE. THE JACKS USED ALSO CONFORM TO PARAMETERS SET IN EIA/TIA 568, TSB36 AND TSB40A.

B. IN A PROPERTY INSTALLED CATEGORY 6 UTP WIRING ARRANGEMENT. C. THE WIRING ARRANGEMENT OF THE JACK SHALL CONFORM TO THE EIA/TIA 568, TSB36 AND TSB40A.
3. THE JACK SHALL POSSESS THE FOLLOWING CHARACTERISTICS:

A. THE EIGHT (8) POSITION/ EIGHT (8) CONDUCTOR JACK SHALL BE CAPABLE OF SUPPORTING THE PREVIOUSLY DEFINED DATA RATES AS WELL AS VOICE (INCLUDING ISDN).

B. UTILIZATION OF 110 TYPE OR EQUIVALENT INSULATION DISPLACEMENT HARDWARE FOR HORIZONTAL WIRE ATTACHMENT AND ACCEPTANCE OF 22 OR 24 AWG CONDUCTORS.

C. THE JACK WIRES SHALL CONSIST OF 50 MICRO-INCH LUBRICATED GOLD PLATING OVER 100 MICRO-INCH NICKEL UNDERPLATING.

D. ANY VACANT FACEPLATE POSITION SHALL BE RESERVED FOR FUTURE GROWTH AND SHOULD HAVE A DUST COVER/BLANK INSERTED.
4. ACCEPTABLE MANUFACTURER'S: ORTRONICS, SERIES 11568 B JACKS AND HUBBELL.
5. WIRELESS ACCESS POINTS SHALL HAVE A BISCUIT JACK AT THE CEILING WITH TWO CAT 6 CABLES AND JACKS.

TELEPHONE/DATA HORIZONTAL WIRING SPECIFICATIONS: (BERK-TEK LANMARK 1000 (CAT 6) CABLE)

1. THIS SECTION COVERS THE CABLE FROM THE COMMUNICATIONS OUTLETS TO THE PUNCH DOWN BLOCK. THESE CABLES SHALL BE AS INDICATED ON DRAWINGS UNSHIELDED TWISTED PAIR CABLE. EACH CABLE SHALL BE PLACED IN A POINT "POINT-TO-POINT" FASHION FROM THE OUTLET TO THE WIRING CLOSET FOR EACH COMMUNICATIONS OUTLET NEEDED. THERE SHALL BE NO INTERMEDIATE SPLICES OR CROSS CONNECTS IN THESE CABLES. PROVIDE ONE (1) CABLE FOR EACH JACK. SEE DRAWINGS FOR NUMBER OF JACKS IN EACH OUTLET. CABLE SHALL BE BLUE IN COLOR. CABLE SHALL BE PLENUM RATED.

2. THE CHARACTERISTICS OF THE HORIZONTAL CABLE ARE AS FOLLOWS:

A. CABLE CONSISTING OF FOUR (4) PAIR OF 23 AWG BARE SOLID COPPER CONDUCTORS INSULATED WITH A PLENUM RATED MATERIAL. THE INSULATED CONDUCTORS ARE TIGHTLY TWISTED INTO PAIRS AND JACKETED WITH FLOUROPOLYMER. NO TYPE OF SHIELD IS REQUIRED IN THE SHEATH.
B. EACH SHEATH SHALL CONTAIN FOUR (4) UNSHIELDED COPPER PAIRS. EACH PAIR SHALL HAVE A DIFFERENT TWIST PER RATIO PER FOOT RANGING FROM 12 TO 24 TWISTS PER FOOT. NO MORE THAT 1/2 INCH MAY BE UNTWISED AND THE SHEATH MAY NOT BE STRIPPED BACK MORE THAN 1/2 INCH AT THE JACK DURING INSTALLATION.
3. THE CABLE SHALL MEET OR EXCEED THE FOLLOWING REQUIREMENTS:
A. EIA/TIA 568 "COMMERCIAL BUILDING WIRING STANDARD," HORIZONTAL CABLE SECTION.
B. EIA/TIA TSB-36 "TECHNICAL SYSTEM BULLETIN ADDITIONAL CABLE SPECIFICATIONS FOR UNSHIELDED TWISTED PAIR CABLES, CATEGORY 6".
C. PROPOSED ANSI X3T9.5 REQUIREMENTS FOR UTP AT 100 MBPS.
D. CERTIFIED LEVEL 6 CABLE UNDER UL'S LAN CABLE CERTIFICATION PROGRAM.
E. IEEE 802.3
F. ICEA S80-576
G. UL SUBJECT 444
H. PUB 48007
I. TA-TSO00133
J. NATIONAL ELECTRIC CODE - ARTICLE 800

4. THE CABLES SHALL MEET THE FOLLOWING REPRESENTATIVE ELECTRICAL AND TRANSMISSION CHARACTERISTICS:
A. MUTUAL CAPACITANCE (PF/FT.): 14 (NOM.)
B. IMPEDANCE Z (OHMS FROM 1-25 MHZ): 100 (+/-15%)
C. DC RESISTANCE - MAX .- (OHMS/1000 FT.): 28.6
D. ATTENUATION - MAXIUM: FREQUENCY (MHZ) - DB/1000 FT. - DB/100 M.

1 -	6.3 - 2.1
4 - 13 -	4.3
10 - 20 -	6.6
16 - 25 -	8.2
20 - 28 -	9.2
25 - 32 -	10.2
31.25 - 36 -	11.8
62.5 - 52 -	17.1
100 - 67 -	21.9

(TEST TO 400 MHZ AT LEVELS PROVIDED BY MFG.)
E. WORST PAIR-TO-PAIR NEAR END CROSSTALK: FREQ. (MHZ) - WORST PAIR NEXT - (DB)

1 -	62
4 -	53
10 -	47
16 -	44
20 -	42
25 -	41
31.25 -	40
62.5 -	35
100 -	32

(TEST TO 400 MHZ AT LEVELS PROVIDED BY MFG.)

DATA PATCH PANEL SPECIFICATIONS:

1. THIS SECTION COVERS THE TERMINATION HARDWARE LOCATED ON THE WALL DATA BACKBOARD. THE TERMINATION HARDWARE SHALL PROVIDE THE CAPABILITY TO BE ABLE TO PATCH CONNECTIONS BETWEEN PORTS ON THE LAN HARDWARE (ELECTRONICS BY OTHERS, N.I.C.) AND HORIZONTAL CABLES TO THE OUTLETS.

2. THE PATCH PANELS SHALL BE CATEGORY 6 MODULAR JACK PANELS (ORTRONICS CAT 6 OR HUBBELL).

3. THE TERMINATION HARDWARE SHALL BE LOCATED ON 19 IN. WALL MOUNTED CABINET. THE CONFIGURATION OF THE PATCH PANELS SHALL BE IN AN AGREEMENT THAT MINIMIZES PATCH CORD LENGTHS. PROVISIONS FOR CABLE MANAGEMENT AND PATCH CORDS (ORGANIZATION OF HORIZONTAL CABLE AND PATCH CORDS) ON THE RACK SHOULD BE INCLUDED.

4. POTENTIAL HORIZONTAL CABLES TO THE OUTLETS WILL BE DIRECTLY CONNECTED TO 110 INSULATION DISPLACEMENT HARDWARE OR EQUIVALENT ASSOCIATED WITH EACH JACK ON THE PATCH PANEL. THE JACKS ON THE PATCH PANEL SHALL BE WIRED TO THE EIA 568B WIRING STANDARD.

5. CATEGORY 6, FACTORY BUILT, MANUFACTURE TESTED PATCH CORDS SHALL BE PROVIDED FOR EACH HUB/SWITCH-PORT PROVIDED.

FIBER OPTIC BACKBONE: (SERVICE TO BUILDING BY SERVING UTILITY)

TELEPHONE CABLES SHALL BE THE SAME AS DATA TERMINATIONS AT OUTLET AND PATCH PANEL.

CONDUIT, RACEWAY, AND BACKBOARDS:

1. PROVIDE 1IN. EMT FROM EACH OUTLET TO 12 INCHES ABOVE ACCESSIBLE CEILING. PROVIDE 4 IN. SQUARE BACKBOX WITH SINGLE GANG PLASTER RING FOR EACH TELEPHONE/DATA OUTLET. ALL CONDUIT SHALL BE CONCEALED. PROVIDE FACEPLATE WITH MODULAR JACKS. PROVIDE PULL STRING IN ALL EMPTY CONDUITS.

2. WHERE PLASTER OR UNACCESSIBLE CEILINGS ARE PRESENT, PROVIDE 1IN. EMT FROM EACH OUTLET TO TELEPHONE BACKBOARD OR TELEPHONE CONNECTION POINT AS DESCRIBED IN THE CONTRACT DOCUMENTS. PROVIDE 4 IN. SQUARE BACKBOX WITH SINGLE GANG PLASTER RING FOR EACH TELEPHONE/DATA OUTLET. ALL CONDUIT SHALL BE CONCEALED. PROVIDE FACEPLATE WITH MODULAR JACKS. PROVIDE PULL STRING IN ALL EMPTY CONDUITS.

3. SERVICE CONDUIT: PROVIDE (4) 3 INCH CONDUIT AND CABLE IN LOCATIONS NOTED ON DRAWINGS. FROM D-MARK POINT OUTSIDE BUILDING TO COMM ROOM. FIBER SERVICE BY SERVING UTILITY COMPANY.

4. BACKBOARD: PROVIDE PLYWOOD BACKBOARD AS DESCRIBED UNDER "SUPPORTING DEVICES" IN THESE ELECTRICAL SPECIFICATIONS.

CABLE MANAGEMENT PANEL:

1. PAINTED STEEL PANEL FOR STANDARD 19 IN. RACK MOUNTING, WITH FIVE HORIZONTAL 3 IN. X 4 IN. CABLE MANAGEMENT RINGS.

UNINTERRUPTIBLE POWER SUPPLY FOR DATA RACK:

1. THE NETWORK HUB/SWITCH UNIT SHALL BE PLUGGED INTO AN UNINTERRUPTABLE POWER SUPPLY WHICH OPERATES IN A HOT STANDBY STATE WHEN THE AC POWER IS PRESENT, PROVIDING POWER OF CONSISTENT QUALITY. ALSO, THE SWITCH TIME MUST NOT BE MORE THAN 3.5 MICROSECONDS. UPS SHALL BE RACK MOUNTED AND BE A MINIMUM OF 1000 VA CAPACITY.

PULL AND JUNCTION BOX COVER IDENTIFICATION:
1. SEE EQUIPMENT IDENTIFICATION IN THIS ELECTRICAL DIVISION OF THE SPECIFICATIONS.

LABELING:

1. SYSTEM SHALL BE COMPLETELY LABELED, WITH CIRCUIT NUMBERS INDICATED ON THE PATCH PANEL, OUTLET JACKS, AND BOTH ENDS OF THE CABLE. PROVIDE A LIST INDICATING CIRCUIT NUMBERS INSTALLED TO EACH SPACE.

TESTING AND CERTIFICATION:
1. TESTING COPPER DISTRIBUTION SYSTEMS ARE CRUCIAL IN ASSURING THE OVERALL INTEGRITY AND SATISFACTORY PERFORMANCE OF THE NETWORK. TEST RESULTS QUANTIFY SYSTEM QUALITY, IDENTIFY SYSTEM FAULTS, AND ESTABLISH THE BASELINE ACCOUNTABILITY PERFORMANCE OF THE SYSTEM. PROPER TESTING ALSO MAXIMIZES THE LONGEVITY OF THE SYSTEM, MINIMIZES DOWNTIME AND MAINTENANCE, AND FACILITATES SYSTEM UPGRADES OR RECONFIGURATION.

2. THE CONTRACTOR SHALL PROVIDE PROOF OF COMMUNICATIONS WIRING SYSTEMS CERTIFICATION AND TESTING CERTIFICATION.

3. ALL DATA WIRING AND TERMINATIONS SHALL BE TESTED AND MUST PASS EIA/TIA STANDARDS FOR CATEGORY 6 WIRING. ALL WIRING AND TERMINOLOGY FOR VOICE CABLE SHALL BE TESTED FOR CONTINUITY. ALL FAULTS SHALL BE CORRECTED.
4. ALL TEST RESULTS MUST BE PRINTED AND SHOW THE FOLLOWING RESULTS:

IMPEDANCE (TDR), CABLE LENGTH, ATTENUATION, NEAR END CROSS TALK (NEXT), LINE MAPPING, DC OHMS, OTDR.

GUARANTEES:

1. ALL COMMUNICATION OUTLETS WIRED AND SERVICEABLE MUST BE TESTED AND CERTIFIED IN COMPLIANCE WITH THE ANSI/IEEE 802.3 AND EIA/TIA 568 CATEGORY 6 SPECIFICATIONS. TESTING MUST BE "END-TO-END". TEST RESULTS SHALL BE FORWARDED TO ARCHITECT A MINIMUM OF ONE WEEK PRIOR TO FINAL INSPECTION.

SECTION G: TELEVISION DISTRIBUTION SYSTEM

SUBMITTALS:

1. SHOP DRAWINGS CONSISTING OF MANUFACTURER'S PUBLISHED LITERATURE.

MANUFACTURERS:

1. ACCEPTABLE MANUFACTURERS ARE LEVITON AND WEST PENN.

2. THE ACCEPTABLE MANUFACTURERS SYSTEMS LISTED ABOVE SHALL BE INSTALLED BY THE AUTHORIZED LOCAL FACTORY DEALER/REPRESENTATIVE FOR THAT PRODUCT. THE FACTORY DEALER/REPRESENTATIVE SHALL HOLD A CURRENT LOW VOLTAGE CONTRACTOR'S LICENSE.

SCOPE:

1. PROVIDE A COMPLETE OPERATIONAL CABLE ELECTRONIC DISTRIBUTION SYSTEM INCLUDING CONDUIT, WIRING, SPLITTERS, OUTLETS, J-HOOKS, AND ALL OTHER ACTIVE AND INACTIVE DEVICES NECESSARY FOR THE ACQUISITION, PROCESSING AND DISTRIBUTION OF TELEVISION CHANNELS.

GENERAL REQUIREMENTS:

1. ALL EQUIPMENT SHALL BEAR THE LABEL OF UNDERWRITER'S LABORATORIES AND BE TESTED FOR USE UNDER THEIR RE- EXAMINATION SERVICE.

2. ALL WIRING SHALL BE RUN IN CONDUIT/J-HOOK SYSTEM AND TV SUBCONTRACTOR SHALL PULL ALL WIRE AND MAKE UP ALL CONNECTIONS.

3. THE ENTIRE DISTRIBUTION SYSTEM SHALL COMPLY WITH FCC RADIATION REGULATIONS.

4. THE TELEVISION SYSTEM INSTALLER SHALL BE AN AUTHORIZED DISTRIBUTOR FOR THE EQUIPMENT SUPPLIED UNDER THIS CONTRACT. HE SHALL MAINTAIN UNDER HIS DIRECT CONTROL A SERVICE ORGANIZATION CAPABLE OF FURNISHING SERVICE UNDER THE FOLLOWING WARRANTY STATEMENT:
THE WARRANTY SHALL COVER SERVICE, TRAVEL, AND PARTS FOR A PERIOD OF ONE (1) YEAR FROM THE DATE OF ACCEPTANCE, WITH A SECOND YEAR SERVICE CONTRACT TO BE OFFERED UPON EXPIRATION OF THE WARRANTY. THE PRICE OF THE SECOND YEAR CONTRACT OFFER SHALL BE SPECIFIED AT THE TIME THE ORIGINAL CONTRACT IS ACCEPTED. INSTALLER EMPLOYED BY THE CONTRACTOR SHALL POSSESS THE APPROPRIATE LOW VOLTAGE INSTALLER LICENSE ISSUED BY THE GEORGIA SECRETARY OF STATE.

5. THE TV SYSTEM INSTALLER SHALL COORDINATE SERVICE INSTALLATION WITH THE LOCAL CABLE TV COMPANY MAKING ALL ARRANGEMENTS FOR CABLE SERVICE AND PAYING ALL COSTS ASSOCIATED WITH SAME.

EQUIPMENT:

1. SPLITTING/COMBINING DEVICES SHALL BE HYBRID TYPE, HAVING ESSENTIALLY FLAT RESPONSE ACROSS THE FREQUENCIES UTILIZED ON THE SYSTEM. ALL SPLITTERS AND DIRECTIONAL COUPLERS SHALL BE HOUSED IN ENVIRONMENTAL HOUSING. ALL DEVICES SHALL HAVE "F" TYPE FITTINGS. DIRECTIONAL COUPLERS SHALL BE JERROLD DC-B SERIES. SPLITTERS SHALL BE JERROLD 1596C/7597B.

2. TV OUTLET SHALL BE AN ALL-CHANNEL FEED THROUGH UNIT (0-DB) FOR CONNECTING THE TV SIGNAL TO THE OWNER FURNISHED TV. THE UNIT SHALL HAVE A PATENTED UNIVERSAL BUSHING CABLE CONNECTOR WHICH FITS CAC-6 TYPE CABLE. AN IVORY PLASTIC SADDLE SHALL BE FURNISHED AND THE OUTLET SHALL BE ADAPTABLE TO A STANDARD DUPLEX, STAINLESS STEEL COVERPLATE, JERROLD UT-12.

3. COAXIAL CABLE SHALL BE 75 OHMS NOMINAL IMPEDANCE AND SHALL BE MARKED WITH THE MANUFACTURER'S NAME. EACH CARTON OR ROLL OF CABLE SHALL DISPLAY CERTIFICATION THAT IT HAS BEEN SWEEP TESTED BY THE MAKER BEFORE SHIPPING. THE CABLE SHALL BE JERROLD CAC-II TYPE. HEAD END HOOK-UP CABLES AND TV SET CONNECTING CABLES SHALL BE OF THE RG-6 TYPE. SUPPLY ONE TV SET CONNECTING CABLE OF RG-6 WITH "F" AND "G" CONNECTORS FOR EACH OUTLET. CABLE SHALL BE RATED FOR UNDERGROUND INSTALLATION.

EXECUTION:

1. BEFORE THE CONTRACT IS CONSIDERED COMPLETE, THE CONTRACTOR MUST CONDUCT AN OPERATING TEST FOR APPROVAL. THE SYSTEM MUST BE DEMONSTRATED TO OPERATE IN ACCORDANCE WITH THE REQUIREMENTS OF THE SPECIFICATIONS.

CONDUIT SYSTEM:

1. PROVIDE CONDUIT AND OUTLET BOXES FOR THE INSTALLATION OF TELEVISION WIRING TO TELEVISION HEAD AND LOCATION.

2. LOCATION OF TV OUTLETS SHALL BE AS SHOWN ON THE DRAWINGS.

3. HEIGHT OF TV OUTLETS SHALL BE AS NOTED ON THE DRAWINGS. ALL OUTLET BOXES SHALL BE TWO GANG TYPE, 4 IN. X 4 IN. X 2 1/4 IN. DEEP, WITH SINGLE GANG PLASTER RINGS. PLASTER RINGS SHALL BE 1 1/2 IN. DEEP AND SHALL BE FLUSH WITH THE FINISH OF WALL.

4. TV OUTLET BOXES SHALL HAVE ONLY ONE ENTRY OF 3/4" CONDUIT. DO NOT USE OUTLET BOX AS JUNCTION POINT BECAUSE THE EQUIPMENT SMALL ENOUGH TO FIT THIS SIZE IS NOT ACCEPTABLE.

5. CONDUIT AND OUTLET BOXES AND THEIR INSTALLATION SHALL BE AS COVERED UNDER SECTION B OF THESE SPECIFICATIONS.

SECTION H: DRY TYPE TRANSFORMERS

DRY TYPE TRANSFORMER:

1. MANUFACTURERS: ACCEPTABLE MANUFACTURERS ARE AS FOLLOWS:

SQUARE D, GENERAL ELECTRIC, EATON, OR SIEMENS.

2. GENERAL: TRANSFORMERS SHALL BE RATED 480 VOLT DELTA 120/208 VOLT WYE OR AS OTHERWISE NOTED WITH KVA RATINGS AS INDICATED ON DRAWINGS. AUTOTRANSFORMERS ARE NOT ACCEPTABLE.

3. ENCLOSURES: ALL VENTILATING OPENINGS SHALL BE OF THE LOUVERED TYPE. THE BASE OF THE TRANSFORMER SHALL BE CONSTRUCTED OF MINIMUM TWELVE GAUGE STEEL WITH STAMPED OPENINGS FOR VENTILATION. THE ENCLOSURE COATING SHALL BE UL RECOGNIZED FOR OUTDOOR USE, COLOR ANSI 49.

4. TAPS: ALL TRANSFORMERS 15 KVA AND LARGER SHALL HAVE TWO 2-1/2% FULL CAPACITY TAPS ABOVE AND FOUR 2-1/2% FULL CAPACITY TAPS BELOW NORMAL RATED PRIMARY VOLTAGE.

5. INSULATION: TRANSFORMERS WITH THE RATINGS THROUGH 25 KVA SHALL HAVE EITHER CLASS B INSULATION AND BE DESIGNED SO THAT UNDER FULL LOAD THE AVERAGE CONDUCTOR TEMPERATURE DOES NOT EXCEED 80 DEGREE C RISE ABOVE 40 DEGREE C AMBIENT, OR CLASS H INSULATION AND BE DESIGNED SO THAT UNDER FULL LOAD THE AVERAGE CONDUCTOR TEMPERATURE DOES NOT EXCEED 115 DEGREE C RISE ABOVE 40 DEGREE C AMBIENT. TRANSFORMERS WITH RATINGS 30 KVA OR LARGER SHALL BE CONSTRUCTED WITH CLASS H INSULATION AND SO DESIGNED THAT UNDER FULL LOAD THE AVERAGE CONDUCTOR TEMPERATURE DOES NOT EXCEED 115 DEGREE C RISE.

6. COILS:

A. TRANSFORMER COILS MUST BE VACUUM IMPREGNATED WITH NON-HYGROSCOPIC, THERMOSETTING VARNISH, AND SHALL HAVE A FINAL WRAP OF ELECTRIC INSULATING MATERIAL DESIGNED TO PREVENT INJURY TO THE MAGNET WIRE. TRANSFORMERS HAVING COILS WITH MAGNET WIRE VISIBLE WILL NOT BE ACCEPTABLE.

B. THE CORE AND COIL SHALL BE ISOLATED FROM THE ENCLOSURE BY MEANS OF VIBRATION ABSORBING MOUNTS. THERE SHALL BE NO METAL-TO-METAL CONTACT BETWEEN THE CORE AND COIL AND THE ENCLOSURE. ON UNITS 500 KVA AND SMALLER, THE VIBRATION ISOLATING SYSTEM SHALL BE SO DESIGNED AS TO PROVIDE FOR CONTINUAL SECUREMENT OF THE CORE AND COIL UNIT TO THE ENCLOSURE.

C. NEUTRAL TERMINAL SIZE SHALL BE DOUBLED (200% OF SECONDARY RATED PHASE CURRENT) FOR OVERSIZE NEUTRAL INSTALLATION.

D. SOUND LEVELS SHALL NOT EXCEED: 15 TO 50 KVA - 45 DB; 51- 150 KVA - 50 DB; OR AS OTHERWISE NOTED ON THE DRAWINGS.

E. TRANSFORMER SHALL CONTAIN FULL WIDTH ELECTROSTATIC.

F. TRANSFORMERS SHALL BE CONSTRUCTED OF REDUCED CORE FLUX TO COMPENSATE FOR HARMONIC DISTORTION.

INSTALLATION:

1. THE CORE AND COILS SHALL BE VISIBLY GROUNDED TO THE FRAME OF THE TRANSFORMER CUBICLE BY MEANS OF A FLEXIBLE GROUNDING STRAP.

2. PROVIDE RUBBER-IN-SHEAR VIBRATION ISOLATOR UNDER EACH TRANSFORMER CORNER. BOLT THE ISOLATOR TO THE TRANSFORMER AND TO THE HOUSEKEEPING PAD.

3. COORDINATE TRANSFORMER SUSPENSION WITH ARCHITECT TO MINIMZE NOISE TRANSMISSION. IN EACH SUSPENSION ROD, PROVIDE A SPRING HANGER ISOLATOR.

PHASE 2

Seal: GEORGIA REGISTERED PROFESSIONAL ENGINEER JEFFREY H. McGEE

ELECTRICAL DESIGN
EDC CONSULTANTS, INC.
175 NEW ST.-STE.1
MACON, GA 31201
EDC• M24004

Client: sunbelt BUILDERS™
10641 HWY 36, COVINGTON, GA 30014, TEL: 770 786 5031

Project:
R. L. COUSINS CENTER
NEWTON CO. BOC RFP #24-04
8134 GEIGER STREET, N.W.
COVINGTON, GEORGIA.

Issue Date:	Initial:	Drwg. Revision Description:
06-27-24	TAW	FOR CONSTRUCTION

Project No.: 2023012
Drwg. Date: 06/27/24
Drwg. Revision:
Drawn By: TAW
Checked By: JHM
File Name:

Sheet Title: *ELECTRICAL SPECIFICATIONS*

Sheet No.: E-0.2

© BETA DESIGN GROUP, P.C. 2014 This drawing may be utilized only for the purpose of constructing or installing the work shown thereon at the site of the work specified. Any other use of this drawing, including without limitation any reproduction or alteration of this drawing, without the prior written approval of Beta Design Group P.C. is prohibited.

ALPHA BLDG SET 08-27-2024

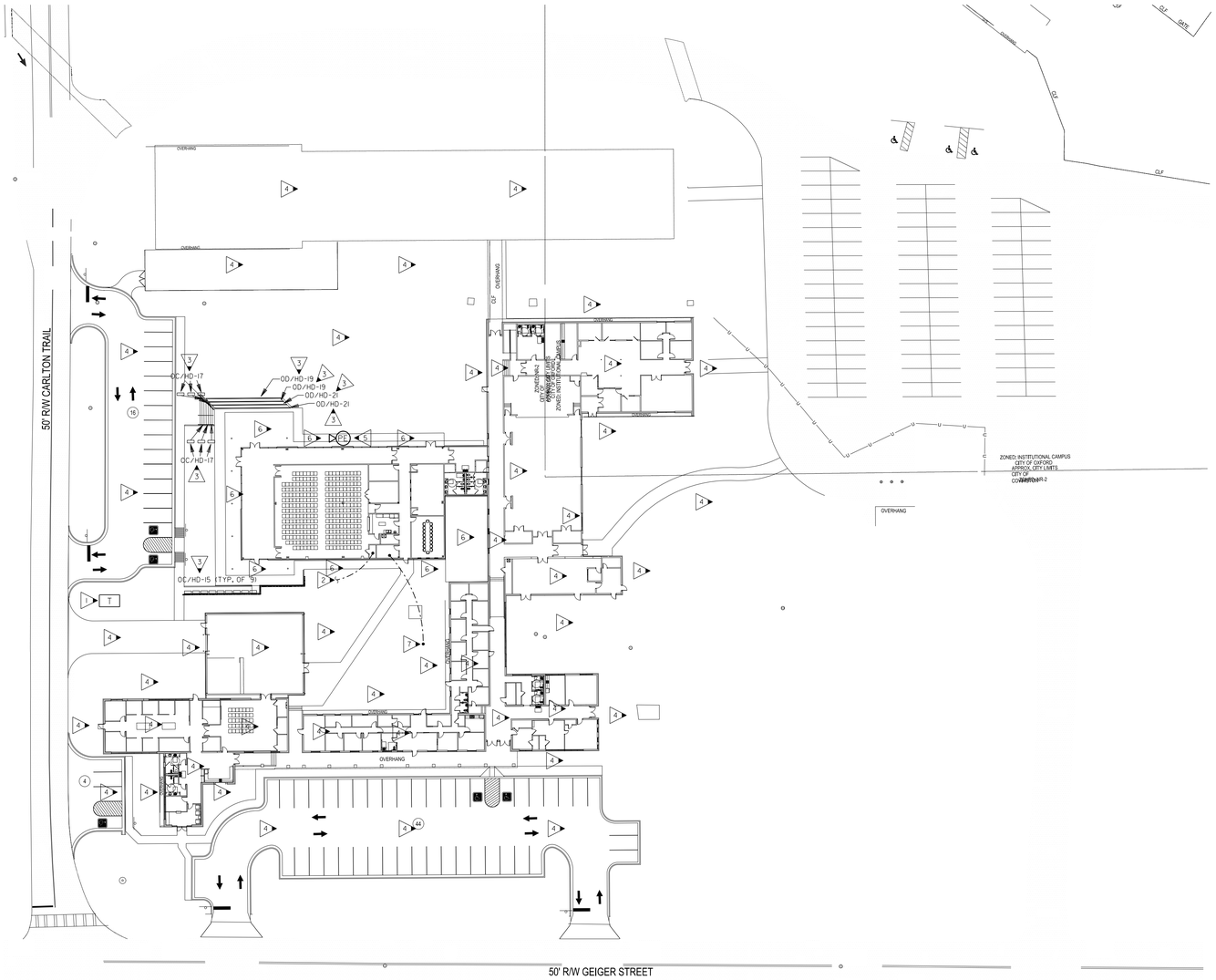

KEYED NOTES: (THIS SHEET ONLY)

1. EXISTING LOCATION OF TRANSFORMER SET DURING PHASE 1 OF CONSTRUCTION. FIELD VERIFY EXACT LOCATION.
2. (4) 3 IN. CONDUITS FROM CORNER OF MDF ROOM SHOWN TO D.MARK FOR CATV, DATA/TEL AND ONE SPARE WERE PROVIDED IN PHASE 1 OF CONSTRUCTION. VERIFY EXACT STUB OUT LOCATIONS OF LAID UNDERGROUND CONDUIT PRIOR TO ANY ELECTRICAL WORK.
3. ROUTE VIA 8 POLE EXTERIOR LIGHTING CONTACTOR/TIMECLOCK LOCATED ADJACENT PANELS. PHOTO CELL SHALL CONTROL DUSK TILL DAWN OPERATION. TIMECLOCK SHALL INTERRUPT CIRCUIT DURING MIDNIGHT HOURS. SEE KEYED NOTE 5 ON SHEET E-2.1. USE #8'S ENTIRE CIRCUIT IN 1IN. CONDUIT UNLESS NOTED OTHERWISE. PROVIDE MANUAL OVERRIDE SWITCH. COORDINATE FINAL LOCATION WITH OWNER.
4. NO WORK IN THIS AREA DURING THIS PHASE OF CONSTRUCTION UNLESS NOTED OTHERWISE. REFER TO PHASE 1 CONSTRUCTION PLANS FOR WORK DONE IN THE AREA.
5. LOCATE P.E. CELL FACING NORTH, CLEAR OF MAN MADE LIGHT SOURCES. J-BOX TO HOUSE P.E. CELL SHALL BE RECESSED MOUNTED WITH STAINLESS STEEL COVER.
6. SEE COMMUNTY BUILDING PLAN - LIGHTING, 1/E-2.1 FOR ADDITIONAL EXTERIOR LIGHTING IN THIS AREA.
7. (2) EXISTING SETS OF 4 IN. C. PROVIDED DURING PHASE 1 CONSTRUCTION FROM MAIN ELECTRICAL ROOM TO THE COMMUNITY BUILDING'S ELECTRICAL ROOM. CONDUIT TO BE USED FOR COMMUNITY BUILDING SERVICE. REFER TO POWER RISER DIAGRAM, 1/E-5.1. VERIFY EXACT STUB UP LOCATIONS OF CONDUITS PRIOR TO ANY ELECTRICAL WORK.

GENERAL NOTES: (THIS SHEET ONLY)

A. SURVEY AND SITE INFORMATION PROVIDED BY OTHERS. VERIFY ALL CONDITIONS ON SITE AND WITH OFFICAL SURVEYS AND OTHER TRADES.

B. CALL UNDERGROUND UTILITY CENTER AND VERIFY ALL UNDERGROUND UTILITIES.

C. UNDERGROUND CONDUIT SHALL BE SCHEDULE 40 PVC.

D. CONTRACTOR SHALL STAKE-OFF ALL EXISTING UTILITIES PRIOR TO ROUGH-IN. ALL NEW INSTALLATION SHALL BE COORDINATED WITH EXISTING UTILITY LOCATIONS.

E. PROVIDE HAND-HOLES AS REQUIRED BY NEC FOR UNDERGROUND FEEDERS SHOWN.

F. PROVIDE 120V POWER TO ALL ELECTRONIC WATER METERS. SEE PLUMBING AND CIVIL DRAWING FOR QUANTITIES AND LOCATIONS.

1 / E-1.1 SITE PLAN - ELECTRICAL

SCALE: 1"=40'-0"

0 20' 40'

LIGHT FIXTURE DESIGNATION DESCRIPTION
EXAMPLE: B/HAI-1/b

PANEL DESIGNATION:
FIXTURE TYPE: TYPE "A" IF NO CAPITAL LETTER SHOWN
CIRCUIT NUMBER
SWITCH LEG DESIGNATION WHEN MULTIPLE SWITCHES ARE IN SAME SPACE/AREA

B/ HAI-1/b

PROVIDE ALL BRANCH CIRCUIT CONDUIT/CONDUCTORS AS NECESSARY TO CONNECT ALL DEVICES SHOWN ON THE CIRCUIT. PROVIDE DEDICATED NEUTRALS FOR ALL CIRCUITS. (STRIPED NEUTRAL WITH PHASE COLOR STRIPING)

PHASE 2

Seal: GEORGIA REGISTERED PROFESSIONAL ENGINEER JEFFREY H. McGEE

ELECTRICAL DESIGN
EDC CONSULTANTS, INC.
175 NEW ST.-STE.1
MACON, GA 31201
EDC# M24004

Client: sunbelt BUILDERS™
10641 HWY 36, COVINGTON, GA 30014, TEL: 770 786 3031

Project:
R. L. COUSINS CENTER
NEWTON CO. BOC RFP #24-04
8134 GEIGER STREET, N.W.
COVINGTON, GEORGIA.

Issue Date:	Initial:	Drwg. Revision Description:
06-27-24	TAW	FOR CONSTRUCTION

Project No.: 2023012
Drwg. Date: 06/27/24
Drwg. Revision:
Drawn By: TAW
Checked By: JHM
File Name:

Sheet Title: SITE PLAN - ELECTRICAL

Sheet No.: E-1.1

© BETA DESIGN GROUP, P.C. 2014 This drawing may be utilized only for the purpose of constructing or installing the work shown thereon at the site of the work specified. Any other use of this drawing, including without limitation any reproduction or alteration of this drawing, without the prior written approval of Beta Design Group P.C. is prohibited.

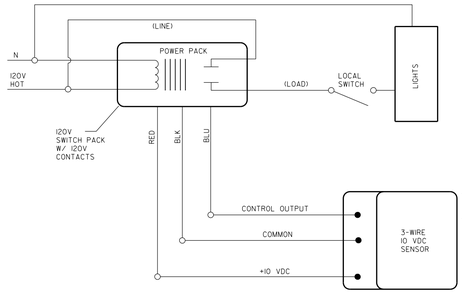

2 / E-2.1 SCHEMATIC WIRING DIAGRAM - SENSOR CONTROL - LIGHTING

NOT TO SCALE

(SEE MANUFACTURERS RECOMMENDATION FOR SCHEMATIC WHERE MULTIPLE SENSORS OCCUR IN SAME SPACE.)

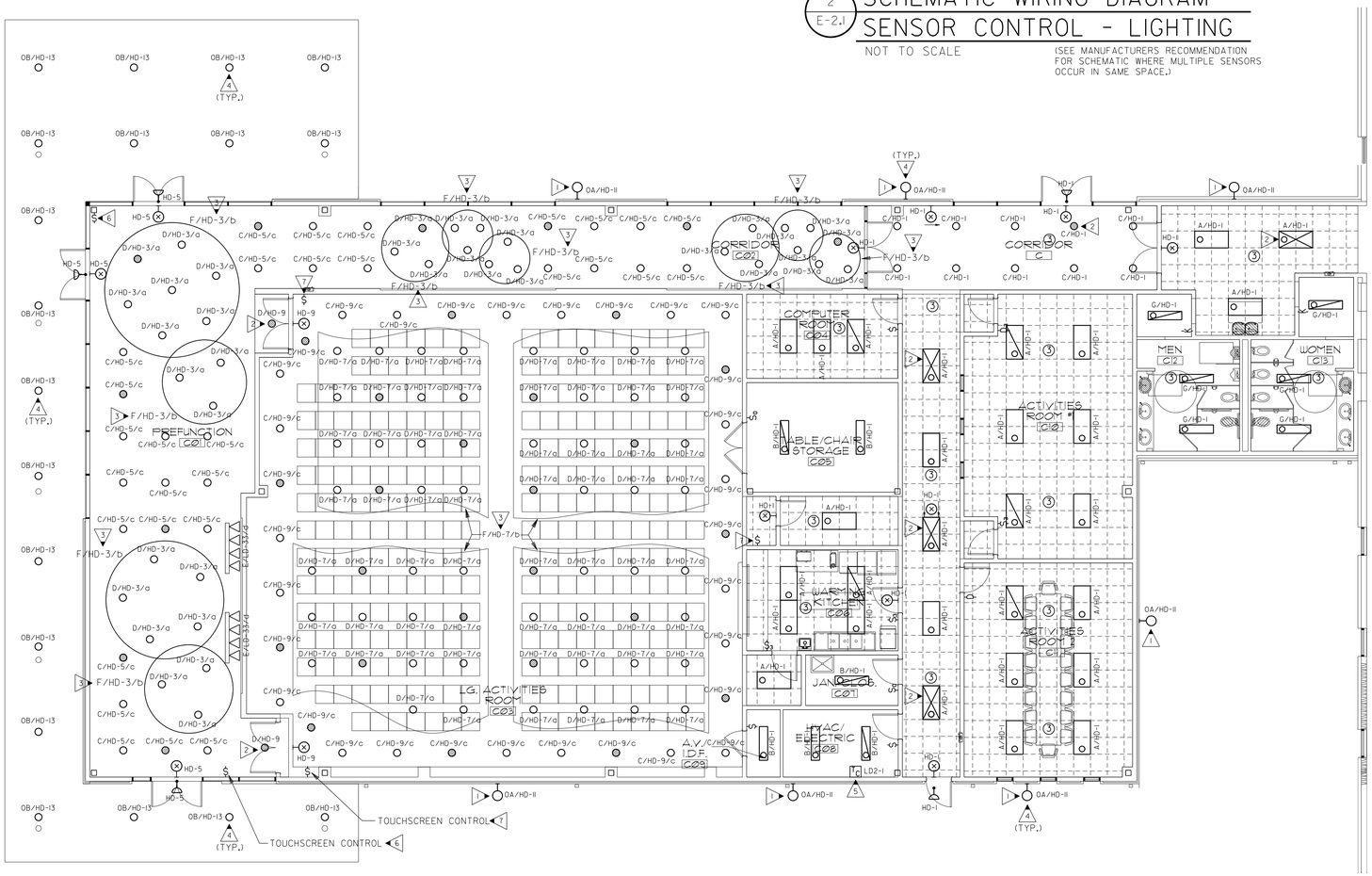

1 / E-2.1 COMMUNITY BUILDING PLAN - LIGHTING

SCALE: 1/8"=1'-0"

0 4' 8'

GENERAL NOTES:

A. THIS PLAN INDICATES AREAS TO BE CONTROLLED BY MOTION SENSORS. SINCE COVERAGES AND DEVICES VARY BETWEEN MANUFACTURERS IT SHALL BE THE CONTRACTORS RESPONSIBILITY TO COORDINATE PROPER DEVICE LOCATION, ORIENTATION AND QUANTITIES WITH THE MANUFACTURER OF THE SYSTEM BEING INSTALLED TO MEET THE SPECIFIED CRITERIA.

B. ALL AREA'S OF THIS PLAN REQUIRE OCCUPANCY SENSOR COVERAGE (EXCEPT FOR MECHANICAL AND ELECTRICAL ROOMS).

C. THERE ARE NO SWITCHPACKS SHOWN ON THIS PLAN. PROVIDE SWITCHPACKS AS REQUIRED WITH SENSORS. SWITCHPACKS ARE TO BE RATED AT 20A. PROVIDE ONE SWITCHPACK PER 20A LIGHTING CIRCUIT OR PER INDIVIDUAL AREA BEING CONTROLLED.

D. CEILING SENSORS ARE TO BE MOUNTED AWAY FROM ANY STRONG AIRFLOW. COORDINATE LOCATION OF SENSOR WITH MECHANICAL AND LIGHTING PLANS.

E. ALL SENSORS SHALL BE CEILING MOUNTED EXCEPT WHERE CEILING HEIGHTS EXCEED 15 FT.-0 IN. PROVIDE SENSOR WITH ADAPTOR PLATE FOR JUNCTION BOX MOUNTING (JUNCTION BOX SHALL BE CONCEALED ABOVE ACCESSIBLE CEILING) JUNCTION BOX SHALL BE SUPPORTED FROM STRUCTURE UTILIZING A 3/8IN. THREADED ROD. WHERE CEILING HEIGHTS EXCEED 15 FT.-0 IN. WALL MOUNT SENSORS AT 12 FT.-0 IN.

F. PROVIDE UNSWITCHED HOT CONDUCTOR TO ALL EMERGENCY AND EXIT LIGHTS.

KEYED NOTES: (THIS SHEET ONLY)

1. COORDINATE EXACT MOUNTING HEIGHT PRIOR TO ELECTRICAL ROUGH-IN.
2. UNSWITCHED NIGHT LIGHT FIXTURE.
3. FIXTURE TYPE F MOUNTED AROUND THE PERIMETER OF THE GYPSUM BOARD CLOUDS FOR UPLIGHTING. COORDINATE EXACT LENGTHS REQUIRED FOR FIXTURE TYPE F WITH SHOWN LAYOUT.
4. ROUTE VIA 8 POLE EXTERIOR LIGHTING CONTACTOR/TIMECLOCK LOCATED ADJACENT PANEL 5. EXISTING MAIN BUILDING PHOTOCELL SHALL CONTROL DUSK TILL DAWN OPERATION. TIMECLOCK SHALL INTERRUPT CIRCUIT DURING MIDNIGHT HOURS. SEE KEYED NOTE 5. USE #10'S ENTIRE CIRCUIT IN 3/4 IN. C. UNLESS NOTED OTHERWISE. PROVIDE MANUAL OVERRIDE SWITCH. COORDINATE FINAL LOCATION WITH OWNER.
5. PROVIDE 365 DAY DIGITAL PROGRAMMABLE TYPE ELECTRONIC CONTROL TIME CLOCK WITH MINIMUM 8 CONTACTS AND MINIMUM 96 ON/OFF EVENTS PER WEEK. CONTACTS RATED FOR MINIMUM 30 AMPS AND 277 VOLTS. PROVIDE WITH NEMA TYPE 1ENCLOSURE AND CAPACITOR BACKUP. PROVIDE WITH AUTO-ON-OFF FUNCTION. PROVIDE AUXILIARY INPUT FROM PHOTO CELL FOR OVERRIDE ON-OR-OFF CONTROL.
6. PROVIDE A FOUR ZONE ROOM LIGHTING CONTROLLER SYSTEM. PROVIDE SYSTEM WITH TOUCHSCREEN CONTROL AND ONE MULTISCENE (4-SCENE+OFF) WALL BOX STATION AS SHOWN. PROVIDE SYSTEM COMPLETE WITH POWER PACKS AND CONNECTIVITY BETWEEN CONTROLLER. ROUTE ALL LIGHTING CIRCUITS VIA CONTROLLER OR CONTROLLED POWER PACK. SYSTEM SHALL BE FULLY PROGRAMMABLE. PROVIDE INTERCONNECTIVITY REQUIRED BY SYSTEM PROVIDED. BASIS OF DESIGN IS THE INTELLIGENT NLIGHT NPOD SYSTEM. SYSTEM SHALL CONTROL FIXTURES IN THE PREFUNCTION C01 & CORRIDOR C02 AREAS WITH SHOWN SWITCH INDICATIONS (a, b, c & d) WITH EACH INDICATION REPRESENTING A SEPARATELY CONTROLLED ZONE.
7. PROVIDE A THREE ZONE ROOM LIGHTING CONTROLLER SYSTEM. PROVIDE SYSTEM WITH TOUCHSCREEN CONTROL AND ONE MULTISCENE (4-SCENE+OFF) WALL BOX STATION AS SHOWN. PROVIDE SYSTEM COMPLETE WITH POWER PACKS AND CONNECTIVITY BETWEEN CONTROLLER. ROUTE ALL LIGHTING CIRCUITS VIA CONTROLLER OR CONTROLLED POWER PACK. SYSTEM SHALL BE FULLY PROGRAMMABLE. PROVIDE INTERCONNECTIVITY REQUIRED BY SYSTEM PROVIDED. BASIS OF DESIGN IS THE INTELLIGENT NLIGHT NPOD SYSTEM. SYSTEM SHALL CONTROL FIXTURES IN THE LG. ACTIVITIES ROOM C03 AREA WITH SHOWN SWITCH INDICATIONS (a, b, & c) WITH EACH INDICATION REPRESENTING A SEPARATELY CONTROLLED ZONE.

LIGHT FIXTURE DESIGNATION DESCRIPTION

EXAMPLE: B/HAI-1/b

PANEL DESIGNATION:

FIXTURE TYPE: TYPE "A" IF NO CAPITAL LETTER SHOWN

CIRCUIT NUMBER

SWITCH LEG DESIGNATION WHEN MULTIPLE SWITCHES ARE IN SAME SPACE/AREA

B/ HAI-1/b

PROVIDE ALL BRANCH CIRCUIT CONDUIT/CONDUCTORS AS NECESSARY TO CONNECT ALL DEVICES SHOWN ON THE CIRCUIT. PROVIDE DEDICATED NEUTRALS FOR ALL CIRCUITS. (STRIPED NEUTRAL WITH PHASE COLOR STRIPING)

ALPHA BLDG SET 08-27-2024

PHASE 2

Seal: GEORGIA REGISTERED PROFESSIONAL ENGINEER JEFFREY H. McGEE

ELECTRICAL DESIGN CONSULTANTS, INC. 175 NEW ST.-STE.1 MACON, GA 31201 EDC• M24004

Client: SUNBELT BUILDERS™ 10641 HWY 36, COVINGTON, GA 30014, TEL: 770 786 3031

Project: R. L. COUSINS CENTER NEWTON CO. BOC RFP #24-04 8134 GEIGER STREET, N.W. COVINGTON, GEORGIA.

Issue Date:	Initial:	Drwg. Revision Description:
06-27-24	TAW	FOR CONSTRUCTION

Project No.: 2023012
Drwg. Date: 06/27/24
Drwg. Revision:
Drawn By: TAW
Checked By: JHM
File Name:

Sheet Title: COMMUNITY BUILDING PLAN - LIGHTING

Sheet No.: E-2.1

© BETA DESIGN GROUP, P.C. 2014 This drawing may be utilized only for the purpose of constructing or installing the work shown thereon at the site of the work specified. Any other use of this drawing, including without limitation any reproduction or alteration of this drawing, without the prior written approval of Beta Design Group P.C. is prohibited.

ALPHA BLDG SET 08-27-2024

MECHANICAL EQUIPMENT POWER SCHEDULE						
UNIT NAME	VOLTAGE/ PHASE	CIRCUIT BREAKER	PANEL NAME/ CIRCUIT NUMBER	FEEDER	DISCONNECT SWITCH	NOTES
HP-1	208V/1PH	40A/2P	LD-2	3#8, #10G., 1 IN. C.	60A/2P/3R	1
HP-2	208V/1PH	40A/2P	LD-6	3#8, #10G., 1 IN. C.	60A/2P/3R	1
AH-1	208V/3PH	35A/3P	LD-10	4#8, #10G., 1 IN. C.	60A/3P	1,2
AH-2	208V/3PH	35A/3P	LD-16	4#8, #10G., 1 IN. C.	60A/3P	1,2
HPU/ACU-1	208V/1PH	20A/2P	LD-22	3#12, #12G., 3/4 IN. C.	30A/2P/3R	1,3
HPU/ACU-2	208V/1PH	20A/2P	LD-26	3#12, #12G., 3/4 IN. C.	30A/2P/3R	1,3
HPU/ACU-3	208V/1PH	20A/2P	LD-30	3#12, #12G., 3/4 IN. C.	30A/2P/3R	1,3
PU-1	480V/3PH	45A/3P	HD-2	4#8, #10G., 1 IN. C.	60A/3P/3R	1,4
PU-2	480V/3PH	100A/3P	HD-8	4#2, #6G., 1 1/2 IN. C.	100A/3P/3R	1,4
EF-1	120V	20A/1P	LD-34	2#12, #12G., 1/2 IN. C.	MOTOR RATED SWITCH	1,6
EF-2	120V	20A/1P	LD-36	2#12, #12G., 1/2 IN. C.	MOTOR RATED SWITCH	1,6
EF-3	120V	20A/1P	LD-37	2#12, #12G., 1/2 IN. C.	MOTOR RATED SWITCH	1,7
EF-4	120V	20A/1P	LD-39	2#12, #12G., 1/2 IN. C.	MOTOR RATED SWITCH	1,7
EF-5	120V	20A/1P	LD-41	2#12, #12G., 1/2 IN. C.	MOTOR RATED SWITCH	1,5
WH-C07	277V	25A/1P	HD-20	2#10, #10G., 3/4 IN. C.	30A/1P	
RC-1	120V	20A/1P	LD-35	2#12, #12G., 1/2 IN. C.	MOTOR RATED SWITCH	

NOTES:
1. SEE MECHANICAL FOR EXACT CONTROL REQUIREMENTS.
2. PROVIDE DUCT SMOKE DETECTOR IN SUPPLY AIR DUCT. UNIT SHALL COME COMPLETE WITH SAMPLING TUBE AND REMOTE TEST/RESET STATION LOCATED IN MECH/ELEC ROOM IN ACCESSIBLE LOCATION. DETECTOR SHALL SHUT DOWN UNIT UPON ACTIVATION.
3. INDOOR UNIT POWERED VIA OUTDOOR UNIT.
4. UNIT COMES COMPLETE WITH MANUFACTURER PROVIDED DUCT SMOKE DETECTOR. INSTALL DUCT SMOKE DETECTOR IN UNIT SUPPLY AIR DUCT. UNIT SHALL COME COMPLETE WITH SAMPLING TUBE AND REMOTE TEST/RESET STATION LOCATED IN MECH/ELEC ROOM IN ACCESSIBLE LOCATION. DETECTOR SHALL SHUT DOWN UNIT UPON ACTIVATION.
5. FAN SHALL BE CONTROLLED BY A LINE VOLTAGE THERMOSTAT LOCATED IN THE ROOM FAN FAN SERVES. THERMOSTAT TO BE PROVIDED BY ELECTRICAL. COORDINATE THERMOSTAT LOCATION WITH MECHANICAL.
6. FAN SHALL BE CONTROLLED BY A DIGITAL TIME CLOCK LOCATED AT JANITOR CLOSET C07. TIME CLOCK TO BE PROVIDED BY ELECTRICAL. WIRE TIME CLOCK PER MANUFACTURERS RECOMMENDATIONS. PARALLEL FAN WITH PHOTOCELL.
7. FAN SHALL BE CONTROLLDE BY A SWITCH LOCATED IN THE ROOM FAN SERVES.

GENERAL NOTES:

A. COORDINATE EXACT LOCATIONS OF ALL MECHANICAL EQUIPMENT. PRIOR TO ELECTRICAL ROUGH-IN.

B. ALL FLEXIBLE CONDUIT SHALL BE METALLIC WATERPROOF.

C. COORDINATE FINAL RECEPTACLE AND VOICE/DATA OUTLET LOCATIONS WITH ARCHITECTURAL CASEWORK AND OWNER PRIOR TO ROUGH-IN. NO EXCEPTIONS.

D. COORDINATE EXACT CONDUIT REQUIREMENTS FOR THERMOSTATS TO ALL AIR HANDLING UNITS. SEE MECHANICAL DRAWINGS FOR EXACT LOCATIONS. PROVIDE OUTLET BOXES AND CONDUIT TO ABOVE CEILINGS FOR ALL THERMOSTATS.

E. FIRE SEAL ALL FIREWALL PENETRATIONS.

KEYED NOTES: (THIS SHEET ONLY)

1. PROVIDE RECEPTACLE, DATA OUTLET, AND TV OUTLET MOUNTED HIGH ON WALL FOR TV. COORDINATE EXACT LOCATION AND MOUNTING HEIGHT WITH OWNER PRIOR TO ROUGH-IN.
2. COORDINATE EXACT LOCATION OF FLOOR BOX WITH OWNER PRIOR TO ROUGH-IN.
3. PROVIDE CONNECTION TO MOTORIZED SCREEN. COORDINATE EXACT LOCATION WITH OWNER/ARCHITECT PRIOR TO ROUGH-IN.
4. CEILING MOUNTED PROJECTOR. COORDINATE EXACT LOCATION WITH OWNER/ARCHITECT PRIOR TO ROUGH-IN.
5. PROVIDE BISCUIT DATA OUTLET FLUSH MOUNTED ABOVE ACCESSIBLE CEILING FOR WIRELESS ACCESS POINT. COORDINATE EXACT LOCATION WITH OWNER/ ARCHITECT PRIOR TO ROUGH-IN.
6. PROVIDE BISCUIT DATA OUTLET FLUSH MOUNTED IN CEILING FOR WIRELESS ACCESS POINT. COORDINATE EXACT LOCATION WITH OWNER/ARCHITECT PRIOR TO ROUGH-IN.

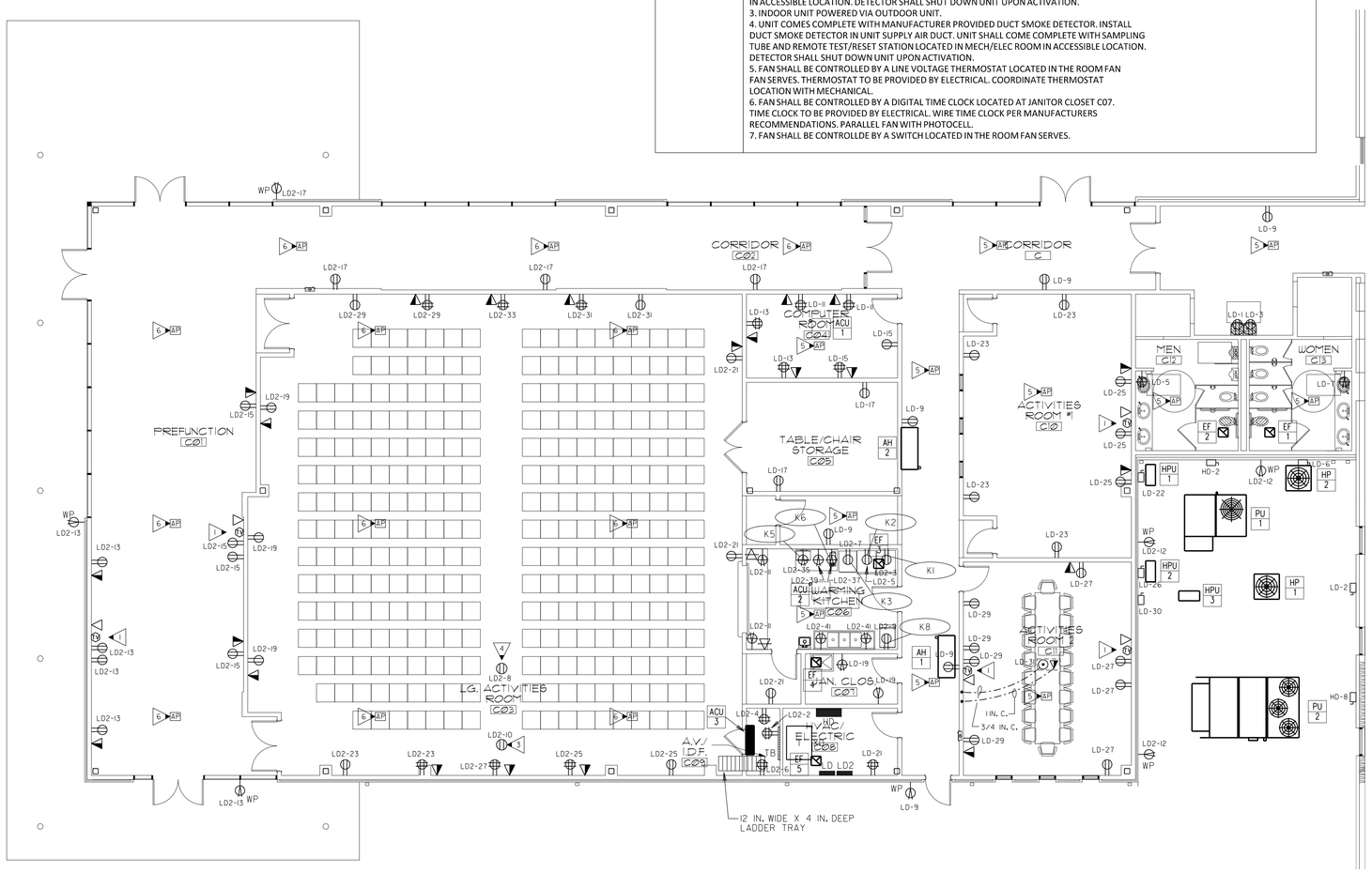

1 / E-3.1 COMMUNITY BUILDING PLAN - POWER & TEL/DATA/TV SYSTEMS

SCALE: 1/8"=1'-0"

0 4' 8'

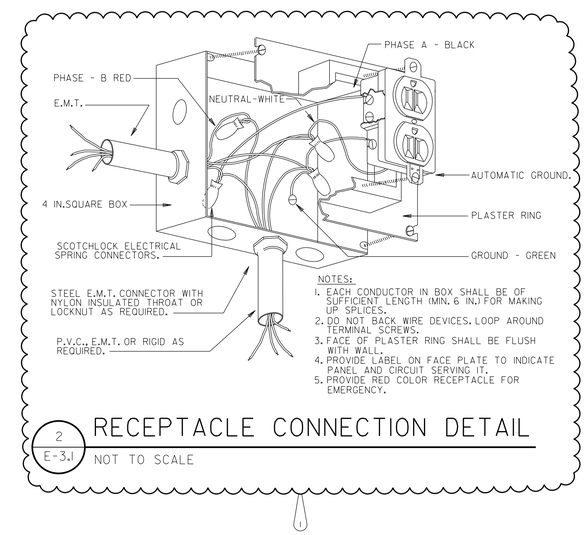

NOTES:
1. EACH CONDUCTOR IN BOX SHALL BE OF SUFFICIENT LENGTH (MIN. 6 IN.) FOR MAKING UP SPLICES.
2. DO NOT BACK WIRE DEVICES. LOOP AROUND TERMINAL SCREWS.
3. FACE OF PLASTER RING SHALL BE FLUSH WITH WALL.
4. PROVIDE LABEL ON FACE PLATE TO INDICATE PANEL AND CIRCUIT SERVING IT.
5. PROVIDE RED COLOR RECEPTACLE FOR EMERGENCY.

2 / E-3.1 RECEPTACLE CONNECTION DETAIL

NOT TO SCALE

PROVIDE ALL BRANCH CIRCUIT CONDUIT/CONDUCTORS AS NECESSARY TO CONNECT ALL DEVICES SHOWN ON THE CIRCUIT. PROVIDE DEDICATED NEUTRALS FOR ALL CIRCUITS. (STRIPED NEUTRAL WITH PHASE COLOR STRIPING)

KITCHEN EQUIPMENT POWER SCHEDULE

ITEM NO.	QUANTITY	DEVICE	VOLTAGE/ PHASE	AMPS	CIRCUIT BREAKER	CIRCUIT NUMBER	FEEDER	DISCONNECT	NEMA CONNECTION	NOTES
K1	1	REFRIGERATOR	120V	3.8A	20A/1P	LD2-3	2#12, #12G., 1/2 IN. C.	CORD AND PLUG	5-15P	1,2,3,4
K2	1	FREEZER	120V	6.5A	20A/1P	LD2-5	2#12, #12G., 1/2 IN. C.	CORD AND PLUG	5-15P	1,2,3,4
K3	1	WARMING CABINET	120V	15A	20A/1P	LD2-7	2#12, #12G., 1/2 IN. C.	CORD AND PLUG	5-20P	1,2,3,4
K5	1	MICROWAVE	120V	13.4A	20A/1P	LD2-35	2#12, #12G., 1/2 IN. C.	CORD AND PLUG	5-15P	1,2,3
K6	1	COFFEE BREWER	120V	13.8A	20A/1P	LD2-37	2#12, #12G., 1/2 IN. C.	CORD AND PLUG	5-15P	1,2,3
K8	1	ICE MAKER	120V	9.1A	20A/1P	LD2-9	2#12, #12G., 1/2 IN. C.	CORD AND PLUG	5-15P	1,2,3,4

NOTES:
1. VERIFY ELECTRICAL REQUIREMENTS WITH EQUIPMENT VENDOR PRIOR TO ROUGH-IN.
2. VERIFY NEMA CONFIGURATION PRIOR TO ROUGH-IN.
3. COORDINATE EXACT ROUGH-IN HEIGHT WITH ARCHITECT PRIOR TO ROUGH-IN.
4. PROVIDE GFCI BREAKER FOR EQUIPMENT.

PHASE 2

Seal: GEORGIA REGISTERED PROFESSIONAL ENGINEER JEFFREY H. McGEE

ELECTRICAL DESIGN
CONSULTANTS, INC.
175 NEW ST.-STE.1
MACON, GA 31201
EOC• M24004

Client: sunbelt BUILDERS™
10641 HWY 36, COVINGTON, GA 30014, TEL: 770 786 5031

Project: R. L. COUSINS CENTER
NEWTON CO. BOC RFP #24-04
8134 GEIGER STREET, N.W.
COVINGTON, GEORGIA.

Issue Date:	Initial:	Drwg. Revision Description:
06-27-24	TAW	FOR CONSTRUCTION
07-03-24	TAW	VE REVISION 1

Project No.: 2023012
Drwg. Date: 06/27/24
Drwg. Revision:
Drawn By: TAW
Checked By: JHM
File Name:

Sheet Title: COMMUNITY BUILDING PLAN - POWER AND TEL/DATA/TV

Sheet No.: E-3.1

© BETA DESIGN GROUP, P.C. 2014. This drawing may be utilized only for the purpose of constructing or installing the work shown thereon at the site of the work specified. Any other use of this drawing, including without limitation any reproduction or alteration of this drawing, without the prior written approval of Beta Design Group P.C. is prohibited.

ALPHA BLDG SET 08-27-2024

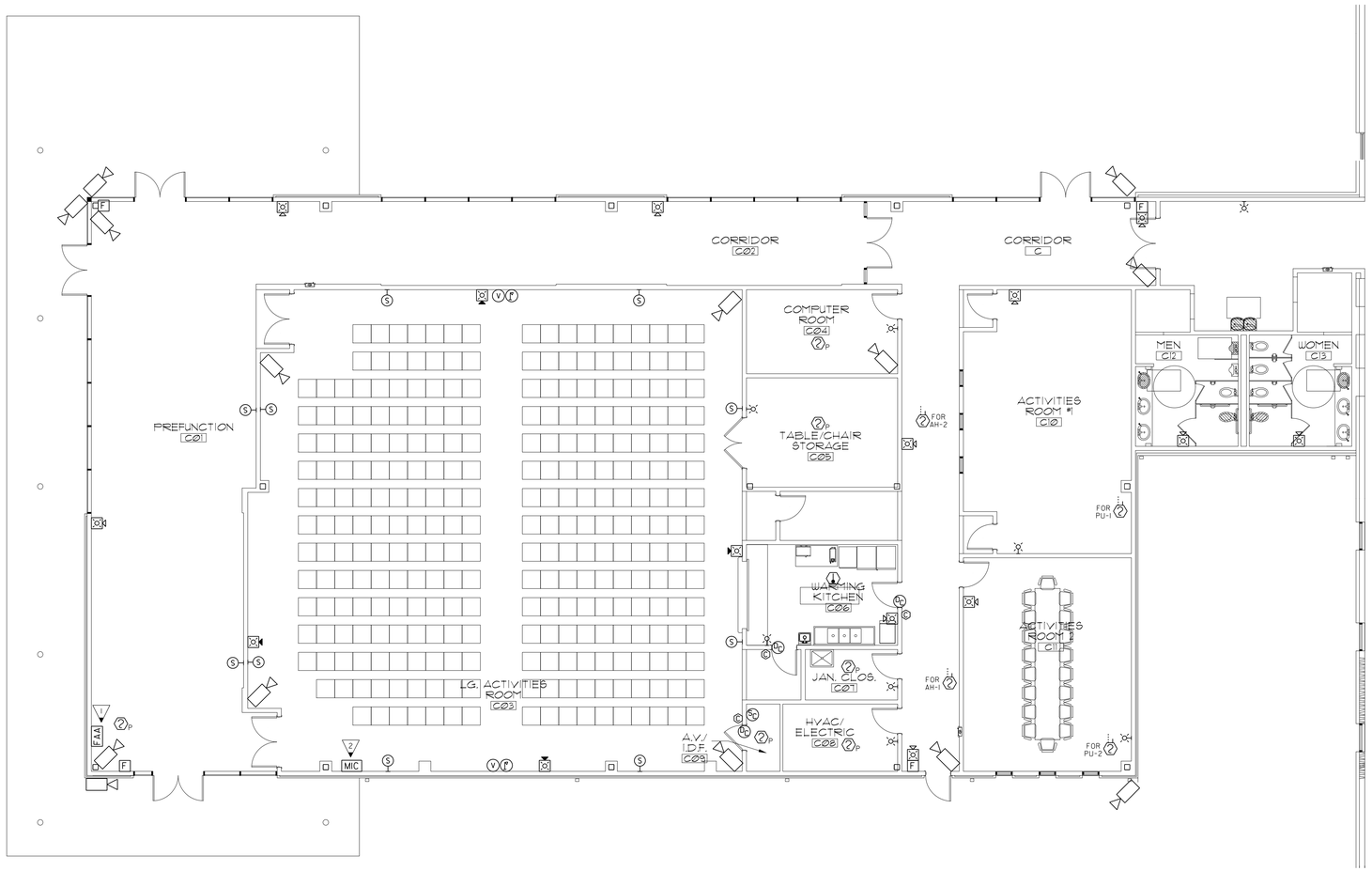

KEYED NOTES: (THIS SHEET ONLY)

1. FIRE ALARM ANNUNCIATOR MUST BE FLUSH MOUNTED.
2. COORDINATE EXACT LOCATION OF REMOTE VOICE EVACUATION MICROPHONE WITH OWNER AND LOCAL JURISDICTION PRIOR TO ROUGH-IN.

FIRE ALARM SUBCONTRACTOR SUBMITTAL REQUIREMENTS TO AUTHORITY HAVING JURISDICTION:

IN ACCORDANCE WITH CHAP 7, NFPA 72 THE FOLLOWING LIST REPRESENTS THE MINIMUM DOCUMENTATION REQUIRED BY THE AUTHORITY HAVING JURISDICTION FOR ALL FIRE ALARM SYSTEMS:

1. THE PRINTED NAME, SIGNATURE AND COPY OF CURRENT GEORGIA LICENSE OF THE LOW VOLTAGE CONTRACTOR WHO IS SUBMITTING THE FIRE ALARM PLANS FOR REVIEW AND WHO WILL BE RESPONSIBLE FOR INSTALLATION.
2. WRITTEN NARRATIVE PROVIDING INTENT AND SYSTEM DESCRIPTION.
3. A FIRE ALARM RISER DIAGRAM.
4. A FLOOR PLAN LAYOUT WITH ROOM NAMES, DOOR LOCATIONS, FIXTURES (DRAWN TO SCALE) SHOWING LOCATION OF ALL DEVICES AND CONTROL EQUIPMENT. DEVICES AND EQUIPMENT SHOWN ON DRAWINGS IS THE MINIMUM REQUIRED. PROVIDE ALL ADDITIONAL DEVICES AND EQUIPMENT AS REQUIRED TO MEET ALL NFPA, IBC, GEORGIA STATE AND LOCAL CODES.
5. THE FIRE ALARM SYSTEM WIRING LAYOUT DESIGN WHICH INCLUDES THE GAUGE(S) OF WIRING INSTALLED.
6. THE SEQUENCE OF OPERATION IN EITHER INPUT/OUTPUT MATRIX OR NARRATIVE FORM.
7. EQUIPMENT TECHNICAL DATA SHEETS FOR ALL COMPONENTS SPECIFIED IN THE FIRE ALARM SYSTEM DESIGN.
8. MANUFACTURERS PUBLISHED INSTRUCTIONS, INCLUDING OPERATION AND MAINTENANCE INSTRUCTIONS.
9. BATTERY CALCULATIONS.
10. A SET OF NAC VOLTAGE DROP/LOAD CALCULATIONS.
11. SPEAKER WATTAGES AND DECIBEL RATINGS FOR BOTH HORN ALARM AND VOICE EVACUATION SYSTEM COMPONENTS (IF APPLICABLE).
12. THE CANDELA RATING SHOWN FOR DRAWINGS FOR EACH STROBE/VISUAL DEVICE AND EACH ILLUMINATED EMERGENCY EXIT SIGN FIRE ALARM SYSTEM MUST COMPLY WITH THE GEORGIA ACCESSIBILITY CODE (120-3-20), LIFE SAFETY CODE (NFPA 101) AND THE NATIONAL FIRE ALARM CODE (NFPA 72).

1 / E-4.1 COMMUNITY BUILDING PLAN - FIRE ALARM, SOUND, & SECURITY

SCALE: 1/8"=1'-0"

0 4' 8'

PROVIDE ALL BRANCH CIRCUIT CONDUIT/CONDUCTORS AS NECESSARY TO CONNECT ALL DEVICES SHOWN ON THE CIRCUIT. PROVIDE DEDICATED NEUTRALS FOR ALL CIRCUITS. (STRIPED NEUTRAL WITH PHASE COLOR STRIPING)

PHASE 2

Seal: GEORGIA REGISTERED PROFESSIONAL ENGINEER JEFFREY H. McGEE

ELECTRICAL DESIGN
EDC CONSULTANTS, INC.
175 NEW ST.-STE.1
MACON, GA 31201
EDC• M24004

Client: sunbelt BUILDERS™
10641 HWY 36, COVINGTON, GA 30014, TEL: 770 786 3031

Project:
R. L. COUSINS CENTER
NEWTON CO. BOC RFP #24-04
8134 GEIGER STREET, N.W.
COVINGTON, GEORGIA.

Issue Date:	Initial:	Drwg. Revision Description:
06-27-24	TAW	FOR CONSTRUCTION

Project No.: 2023012
Drwg. Date: 06/27/24
Drwg. Revision:
Drawn By: TAW
Checked By: JHM
File Name:

Sheet Title: COMMUNITY BUILDING PLAN - FIRE ALARM, SOUND & SECURITY

Sheet No.: E-4.1

© BETA DESIGN GROUP, P.C. 2014 This drawing may be utilized only for the purpose of constructing or installing the work shown thereon at the site of the work specified. Any other use of this drawing, including any reproduction or alteration of this drawing, without the prior written approval of Beta Design Group P.C. is prohibited.

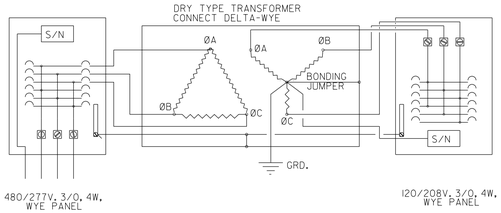

2 E-5.1 DRY TYPE TRANSFORMER CONNECTION

NOT TO SCALE

WIRE COLOR CODE		
A/C	120/208	277/480
PHASE A	BLACK	BROWN
PHASE B	RED	ORANGE
PHASE C	BLUE	YELLOW
NEUTRAL	WHITE	GRAY
GROUND	GREEN	GREEN

VOLTAGE 277 480
PHASE 3 WIRE 4
BUS AMPS 400
PANEL HD
MAIN AMPS 400
LOCATION HVAC / ELEC C08
MOUNTING SURFACE
MAIN LUGS

DESCRIPTION	VOLT AMPS A	VOLT AMPS B	VOLT AMPS C	BRKR AMP	P	CKT NO	BUS CONN	CKT NO	P	BRKR AMP	VOLT AMPS C	VOLT AMPS B	VOLT AMPS A	DESCRIPTION
LIGHTS	1600			20	1	1	A	2	3	45			8878	PU-1
CORR. CLOUD LIGHTS		1644		20	1	3	B	4				8878		
CORR. CYLINDERS			550	20	1	5	C	6			8878			
ACTIVITY CLOUD LTS.	2400			20	1	7	A	8	3	100			20338	PU-2
ACTIVITY CYLINDERS		650		20	1	9	B	10				20338		
WALL PACKS			360	20	1	11	C	12			20338			
EXTERIOR DOWNLTS.	450			20	1	13	A	14	3	175			24908	XFRMR XD
EXTERIOR RAMP LTS.		120		20	1	15	B	16				22754		
EXTERIOR STAIR LTS.			120	20	1	17	C	18			19952			
EXTERIOR STEP LTS.	500			20	1	19	A	20	1	25			4500	WH-C07
EXTERIOR STEP LTS.		500		20	1	21	B	22	1	20				SPARE
SPARE				20	1	23	C	24	1	20				SPARE
SPARE				20	1	25	A	26	1					SPACE
SPARE				20	1	27	B	28	1					SPACE
SPARE				20	1	29	C	30	1					SPACE
SPACE					1	31	A	32	1					SPACE
SPACE					1	33	B	34	1					SPACE
SPACE					1	35	C	36	1					SPACE
TVSS				60	3	37	A	38	3					SPACE
						39	B	40						
						41	C	42						
TOTALS	4950	2914	1030								49168	51970	58624	

VOLT AMPS
BUS A 63574
BUS B 54884
BUS C 50198
TOTAL 168656

REMARKS: PANEL AND BREAKERS RATED FOR MINIMUM 31.0 KAIC

VOLTAGE 120 208
PHASE 3 WIRE 4
BUS AMPS 400
PANEL LD
MAIN AMPS 400
LOCATION HVAC / ELEC C08
MOUNTING SURFACE
MAIN MAIN CIRCUIT BREAKER

DESCRIPTION	VOLT AMPS A	VOLT AMPS B	VOLT AMPS C	BRKR AMP	P	CKT NO	BUS CONN	CKT NO	P	BRKR AMP	VOLT AMPS C	VOLT AMPS B	VOLT AMPS A	DESCRIPTION
* EWC	1000			20	1	1	A	2	2	40			2112	HP-1
* EWC		1000		20	1	3	B	4				2112		
MEN RECEPT.			200	20	1	5	C	6	2	40	2112			HP-2
WOMEN RECEPT.	200			20	1	7	A	8					2112	
CORRIDOR RECEPT.		1200		20	1	9	B	10	3	35		3072		AH-1
COMPUTER RM REC.			800	20	1	11	C	12			3072			
COMPUTER RM REC.	800			20	1	13	A	14					3072	
COMPUTER RM REC.		600		20	1	15	B	16	3	35		3072		AH-2
STORAGE RECEPT.			400	20	1	17	C	18			3072			
JANITOR RECEPT.	400			20	1	19	A	20					3072	
ELEC. RECEPT.		400		20	1	21	B	22	2	20		1082		HPU / ACU-1
ACTIVITY RECEPT.			800	20	1	23	C	24			1082			
ACTIVITY RECEPT.	600			20	1	25	A	26	2	20			1082	HPU / ACU-2
ACTIVITY RECEPT.		800		20	1	27	B	28				1082		
ACTIVITY RECEPT.			800	20	1	29	C	30	2	20	1082			HPU / ACU-3
ACTIVITY FLR BOX	400			20	1	31	A	32					1082	
PREFUNCTION TRACK		1000		20	1	33	B	34	1	20		172		EF-1
RC-1			44	20	1	35	C	36	1	20	172			EF-2
EF-3	20			20	1	37	A	38	3	60				TVSS
EF-4		20		20	1	39	B	40						
EF-5			128	20	1	41	C	42						
TOTALS	3420	5020	3172								10592	10592	12532	

VOLT AMPS
BUS A 15952
BUS B 15612
BUS C 13764
TOTAL 45328

REMARKS: PANEL AND BREAKERS RATED FOR MINIMUM 21.5 KAIC
SECTION 1 OF 2
FEED THRU LUGS
* PROVIDE GFCI BREAKER

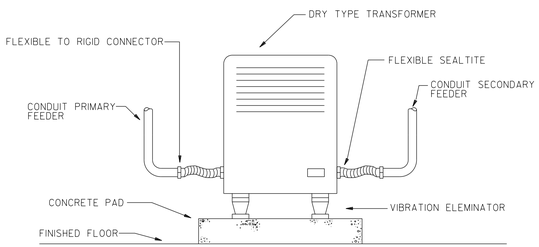

3 E-5.1 FLOOR MOUNTED TRANSFORMER

NOT TO SCALE

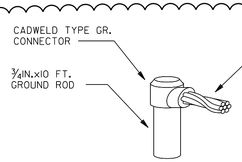

6 E-6.1 CABLE CONNECTION TO GROUND ROD

NOT TO SCALE

PANEL HD DEMAND CALCULATIONS

	CONNECTED LOAD (VA)	DEMAND FACTOR	CALCULATED DEMAND (VA)
TOTAL CONNECTED LOAD (VA)	168,656		
LIGHTING	9,894	1.25	12,368
HVAC	121,020	1.00	121,020
HVAC (CONTINUOUS)	0	1.25	0
LARGEST MOTOR	172	1.25	215
MOTOR LOAD	340	1.00	340
RECEPTACLE (FIRST 10,000 VA)	10,000	1.00	10,000
RECEPTACLE (GREATER THAN 10,000 VA)	7,800	0.50	3,900
WATER HEATER	4,544	1.00	4,544
MISC LOADS	14,886	1.00	14,886
		DEMAND LOAD - VOLT-AMPERES	**167,273**
		DEMAND LOAD - 480V 3-PHASE AMPS	**201.3**

PANEL IS SIZED/RATED FOR 400 AMPS.

VOLTAGE 120 208
PHASE 3 WIRE 4
BUS AMPS 400
PANEL LD2
MAIN AMPS 400
LOCATION HVAC / ELEC C08
MOUNTING SURFACE
MAIN LUGS

DESCRIPTION	VOLT AMPS A	VOLT AMPS B	VOLT AMPS C	BRKR AMP	P	CKT NO	BUS CONN	CKT NO	P	BRKR AMP	VOLT AMPS C	VOLT AMPS B	VOLT AMPS A	DESCRIPTION
LIGHT CONTROL	500			20	1	1	A	2	1	20			500	TB
* REFRIGERATOR		456		20	1	3	B	4	1	20		400		AV RECEPT.
* FREEZER			780	20	1	5	C	6	1	20	400			AV RECEPT.
* WARMING CABINET	1800			20	1	7	A	8	1	20			1500	PROJECTOR
* ICE MAKER		1086		20	1	9	B	10	1	20		1500		SCREEN
WARMING COUNTER			400	20	1	11	C	12	1	20	600			EXTERIOR RECEPT.
PREFUNCTION RECEPT.	1200			20	1	13	A	14	1	20				SPARE
PREFUNCTION RECEPT.		800		20	1	15	B	16	1	20				SPARE
CORRIDOR RECEPT.			800	20	1	17	C	18	1	20				SPARE
ACTIVITIES RECEPT.	600			20	1	19	A	20	1	20				SPARE
ACTIVITIES RECEPT.		600		20	1	21	B	22	1	20				SPARE
ACTIVITIES RECEPT.			600	20	1	23	C	24	1	20				SPARE
ACTIVITIES RECEPT.	600			20	1	25	A	26	1	20				SPARE
ACTIVITIES RECEPT.		400		20	1	27	B	28	1					SPACE
ACTIVITIES RECEPT.			600	20	1	29	C	30	1					SPACE
ACTIVITIES RECEPT.	600			20	1	31	A	32	1					SPACE
ACTIVITIES RECEPT.		400		20	1	33	B	34	1					SPACE
MICROWAVE			1608	20	1	35	C	36	1					SPACE
COFFEE BREWER	1656			20	1	37	A	38	1					SPACE
WARMING APPLIANCE		1500		20	1	39	B	40	1					SPACE
WARMING RECEPT.			400	20	1	41	C	42	1					SPACE
TOTALS	6956	5242	5188								1000	1900	2000	

VOLT AMPS
BUS A 8956
BUS B 7142
BUS C 6188
TOTAL 22286

REMARKS: PANEL AND BREAKERS RATED FOR MINIMUM 21.5 KAIC
SECTION 2 OF 2
* PROVIDE GFCI BREAKER

PANEL LD/LD2 DEMAND CALCULATIONS

	CONNECTED LOAD (VA)	DEMAND FACTOR	CALCULATED DEMAND (VA)
TOTAL CONNECTED LOAD (VA)	67,614		
LIGHTING	1,000	1.25	1,250
HVAC	33,372	1.00	33,372
HVAC (CONTINUOUS)	0	1.25	0
LARGEST MOTOR	172	1.25	215
MOTOR LOAD	340	1.00	340
RECEPTACLE (FIRST 10,000 VA)	10,000	1.00	10,000
RECEPTACLE (GREATER THAN 10,000 VA)	7,800	0.50	3,900
WATER HEATER	44	1.00	44
MISC LOADS	14,886	1.00	14,886
		DEMAND LOAD - VOLT-AMPERES	**64,007**
		DEMAND LOAD - 208V 3-PHASE AMPS	**177.8**

PANEL IS SIZED/RATED FOR 400 AMPS.

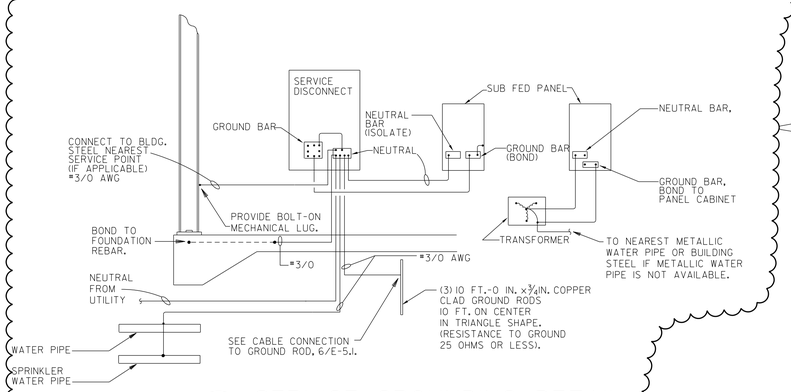

4 E-5.1 SERVICE GROUNDING DETAIL

NOT TO SCALE

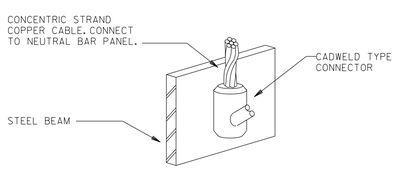

5 E-6.1 CABLE CONNECTION TO STEEL BEAM

NOT TO SCALE

SEE PHASE 1DRAWINGS FOR LOCATIONS OF PAD MOUNTED TRANSFORMER AND NEW MAIN GEAR ROOM.

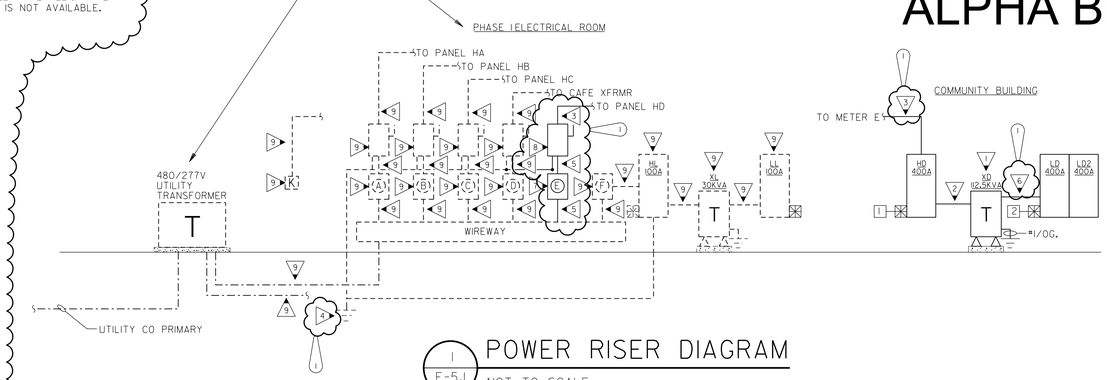

1 E-5.1 POWER RISER DIAGRAM

NOT TO SCALE

ALPHA BLDG SET 08-27-2024

KEYED NOTES: (THIS SHEET ONLY)

1. SEE DRY TYPE TRANSFORMER DETAILS, 2/E-5.1 & 3/E-5.1.
2. 3#2/0, #6G., 2 IN. C.
3. 2 SETS OF 4 IN. C. PROVIDED IN PHASE 1, PROVIDE 4#600MCM, #1/0G. IN (1) 4 IN. C. OTHER 4 IN. C. TO REMAIN AS SPARE.
4. EXISTING GROUNDING CONDUCTOR. BOND NEW E.C.B. TO EXISTING GROUNDING SYSTEM. SEE SERVICE GROUNDING DETAIL, 4/E-5.1.
5. 2 SETS: 4#250MCM ALUM., IN EXISTING 4 IN. C. (2) 4 IN. C. PROVIDED IN PHASE 1.
6. 4#600MCM, #1/0G., 4 IN. C.
7. PROVISION FOR COMMUNITY BUILDING METER PROVIDED IN PHASE 1. PROVIDE 277/480V, 400A METER BASE FOR COMMUNITY BUILDING SERVICE.
8. PROVIDE LABEL "COMMUNITY CENTER DISCONNECT". PROVIDE 400A/3P S.E. RATED ENCLOSED CIRCUIT BREAKER, SHUNT TRIP TYPE, 32.9 KAIC MINIMUM. CONNECT SHUNT TRIP TO EXISTING NEMA 3R KNOX REMOTE POWER BOX TO ALLOW FOR REMOTE DISCONNECTION OF POWER.
9. ELECTRICAL EQUIPMENT PROVIDED IN PHASE 1OF CONSTRUCTION. FIELD VERIFY EXACT LAYOUT OF ELECTRICAL EQUIPMENT.

T.V.S.S.

1 MAIN SERVICE PANELS, PROVIDE 5-#6 CONDUCTORS IN 1" C FROM 60A/3P BREAKER IN SUPPLYING PANEL. PROVIDE BREAKER. U.L.1449 LISTED, 200,000 SURGE CURRENT RATING, SERVICE ENTRANCE RATED, EATON EXTERNALLY MOUNTED "SPD" SERIES OR EQUAL.

2 DISTRIBUTION PANELS, PROVIDE 5-#6 CONDUCTORS IN 1" C FROM 60A/3P BREAKER IN SUPPLYING PANEL. PROVIDE BREAKER. U.L.1449 LISTED, 100,000 SURGE CURRENT RATING, EATON EXTERNALLY MOUNTED "SPD" SERIES OR EQUAL.

PHASE 2

Seal: GEORGIA REGISTERED PROFESSIONAL ENGINEER JEFFREY H. McGEE

ELECTRICAL DESIGN
HDJ CONSULTANTS, INC.
175 NEW ST.-STE.1
MACON, GA 31201
EOC# M24004

Client: sunbelt BUILDERS
10641 HWY 36, COVINGTON, GA 30014, TEL: 770 786 3031

Project: R. L. COUSINS CENTER
NEWTON CO. BOC RFP #24-04
8134 GEIGER STREET, N.W.
COVINGTON, GEORGIA.

Issue Date:	Initial:	Drwg. Revision Description:
06-27-24	TAW	FOR CONSTRUCTION
07-03-24	TAW	VE REVISION 1

Project No.: 2023012
Drwg. Date: 06/27/24
Drwg. Revision:
Drawn By: TAW
Checked By: JHM
File Name:

Sheet Title: POWER RISER DIAGRAM, DETAILS, AND SCHEDULES

Sheet No.: E-5.1

© BETA DESIGN GROUP, P.C. 2014 This drawing may be utilized only for the purpose of constructing or installing the work shown thereon at the site of the work specified. Any other use of this drawing, including without limitation any reproduction or alteration of this drawing, without the prior written approval of Beta Design Group P.C. is prohibited.

ALPHA BLDG SET 08-27-2024

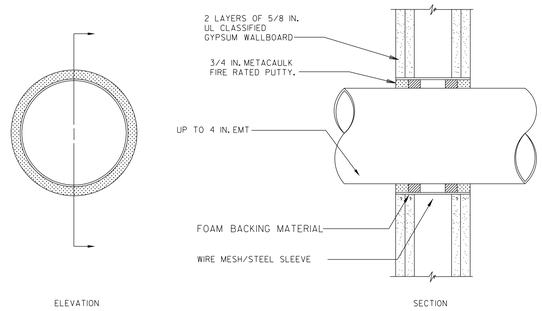

NOTE: WHERE CONDUIT IS USED AS A SLEEVE FOR ROUTING LOW VOLTAGE CABLES THROUGH A RATED WALL, LOCATE CONDUCTORS IN CENTER OF SLEEVE AND FILL OPENING WITH FIRE RATED PUTTY AT EACH END OF SLEEVE.

1 / E-6.1 DETAIL - GYPSUM WALLBOARD PENETRATION

NOT TO SCALE

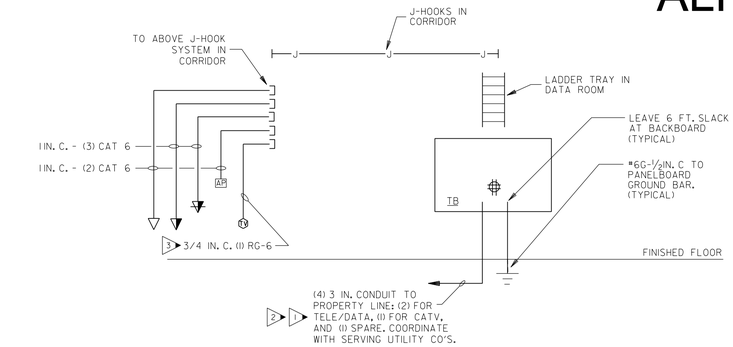

4 / E-6.1 TELEPHONE/DATA/CATV RISER

NOT TO SCALE

KEYED NOTES: (DETAIL 4/E-6.1 ONLY)

1. PROVIDE (2) - 3 IN. CONDUITS FOR DATA/TEL. (1) CONDUIT FOR 50 PAIR EXTERIOR RATED, GEL FILLED COPPER CAT 6. (1) CONDUIT FOR 12 STRAND HYBRID FIBER. COORDINATE WITH OWNER FOR EXACT FIBER SPECIFICATIONS AND TERMINATIONS. COORDINATE EXACT DATA/TEL STUB OUT LOCATIONS AT STREET WITH SERVING UTILITY COMPANIES.
2. PROVIDE (1) - 3 IN. CONDUIT WITH PULL STRING FOR CATV SYSTEM. COORDINATE EXACT STUB OUT LOCATION AT STREET WITH SERVING UTILITY COMPANY.
3. LEAVE 6 FT. OF CABLE COIL AT BACKBOARD AND 1 IN. CABLE COIL IN OUTLET BOXES.

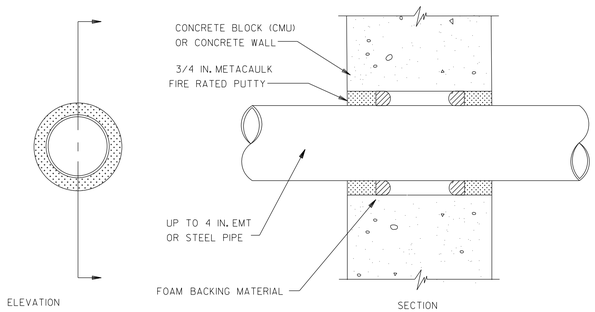

NOTE: WHERE CONDUIT IS USED AS A SLEEVE FOR ROUTING LOW VOLTAGE CABLES THROUGH A RATED WALL, LOCATE CONDUCTORS IN CENTER OF SLEEVE AND FILL OPENING WITH FIRE RATED PUTTY AT EACH END OF SLEEVE.

2 / E-6.1 DETAIL - CONCRETE WALL PENETRATION

NOT TO SCALE

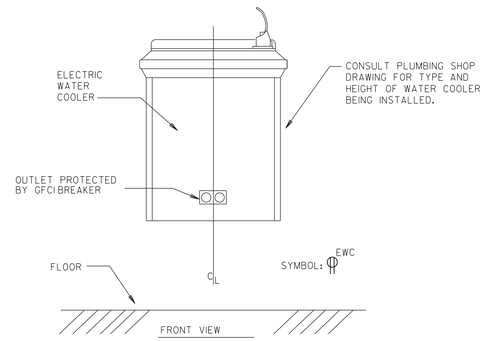

5 / E-6.1 TYPICAL RECEPTACLE LOCATION @ ELECTRIC WATER COOLER

NOT TO SCALE

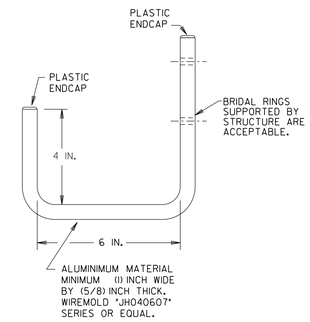

6 / E-6.1 J-HOOK DETAIL

NOT TO SCALE

WIRE MANAGEMENT NOTES

NOTES:

A. THE CONTRACTOR IS RESPONSIBLE FOR PROVIDING A FULL J-HOOK SYSTEM IN THE CORRIDORS FOR LOW VOLTAGE CABLING.

B. ALL J- HOOKS SHALL BE SPACED NO MORE THAN 48 INCHES APART AND NO MORE THAN 12 INCHES FROM THE CORNER OF ANY SPACE.

C. PROVIDE J-HOOKS NO MORE THAN 12 INCHES AWAY FROM CONDUIT SLEEVES.

D. WHERE J-HOOKS ARE (2) ROWS: SPACING BETWEEN THE ROWS SHALL BE 12 INCHES.

E. CONDUIT SLEEVES SHALL BE AT THE SAME LEVEL AS THE ROWS OF J-HOOKS.

F. FIRE SEAL AROUND ALL CONDUIT SLEEVES. SEE ARCHITECTURAL SHEET FOR REQUIRED RATINGS.

G. COORDINATE THE EXACT LEVEL OF J-HOOKS AND CONDUIT SLEEVES WITH OTHER TRADES PRIOR TO ROUGHING.

H. J-HOOKS SHALL NOT BE SUPPORTED BY GYPSUM WALL BOARD. J-HOOKS SHALL BE SUPPORTED BY BLOCK WALL OR STUD. SEE ARCHITECTURAL PLAN FOR WALL MATERIALS.

I. ALL CABLING SHALL BE NEATLY BUNDLED UTILIZING "NOT A CINCH" TYPE RATED VELCRO TIE WRAPS.

J. J-HOOKS SHALL SUPPORT CABLING FOR: FIRE ALARM, DATA, TELEPHONE, CABLETV, SOUND, AND SECURITY.

K. ONE ROW SHALL SUPPORT SOUND CABLING, ONE ROW SHALL SUPPORT DATA/TELEPHONE CABLING, ONE ROW SHALL SUPPORT CABLETV CABLING, ONE ROW SHALL SUPPORT FIRE ALARM SYSTEM, ONE ROW SHALL SUPPORT SECURITY CABLING.

L. SEE DETAIL - CONCRETE WALL PENETRATION, 2/E-6.1.

M. SEE DETAIL - GYPSUM WALLBOARD PENETRATION, 1/E-6.1.

N. WHERE J-HOOKS ARE REQUIRED ABOVE SOLID SOFFITS MORE THAN TWO FEET WIDE, PROVIDE J-HOOKS HUNG FROM STRUCTURE (4 HOOKS PRE 3/8 IN THREADED ROD.

O. PROVIDE (2) 2 INCH CONDUIT SLEEVES INTO ALL SPACES FROM CORRIDOR WHERE RATED WALLS OCCUR.

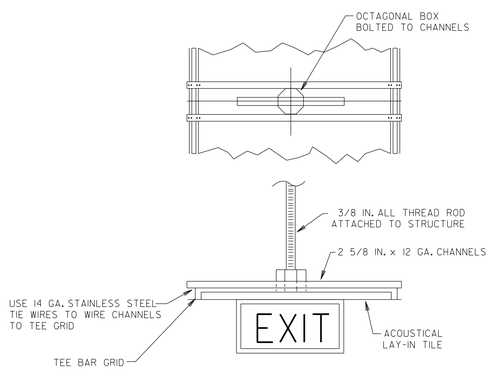

3 / E-6.1 TYPICAL EXIT LIGHT MOUNTING DETAIL

NOT TO SCALE

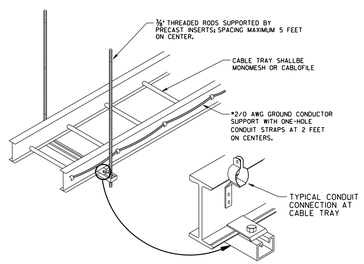

7 / E-6.1 LADDER CABLE TRAY

NOT TO SCALE

NOTE: LADDER TRAY ONLY IN DATA AND LOW VOLTAGE ROOMS. SEE DRAWINGS FOR LADDER TRAY SIZE.

GENERAL NOTES: (DATA CABLING)

1. ADDITIONAL WALL SLEEVES AND WALL PENETRATIONS WILL BE REQUIRED FOR NETWORK CABLING. PROVIDE AS NECESSARY AND FIRESTOP ALL PENETRATIONS THROUGH RATED WALLS.
2. ALL JACKS SHALL BE PROVIDED WITH ICON DENOTING DATA OR VOICE OUTLET. OUTLET SHALL BE LABELED WITH FOLLOWING NOMENCLATURE.
   - D M XXX
     - XXX — JACK NUMBER
     - M — MDF OR IDF DESIGNATION FROM WHICH JACK IS SERVED.
     - D — D OR V INDICATING VOICE OR DATA OUTLET.

   ALL PATCH PANELS AND 110 BLOCKS SHALL BE CORRESPONDINGLY LABELED.
3. PROVIDE METAL D-RING OR RING RUNS AS NECESSARY TO PROPERLY LACE AND SUPPORT ALL CABLING AT BACKBOARDS.
4. REFER TO 1/8 IN. PLANS SHOWING OUTLET LOCATIONS, PANEL LOCATIONS, CEILING TYPES, ETC.
5. GROUND ALL RACKS WITH #6 COPPER LOCATED AT EACH BACKBOARD. CONTRACTOR SHALL ROUTE #6G, 3/4 IN. C. TO GROUND PLATE. PROVIDE 12 IN. CABLE RUNWAY SPANNING FROM TOP OF RACK TO WALL AND TURNED UP TO ABOVE DROP TILE CEILING IN ORDER TO ROUTE CABLE TO RACK. AT EACH RACK LOCATION PROVIDE A 3/4 IN. x 4 FT. x 8 FT. BACKBOARD PAINTED WITH TWO COATS OF BLACK FIRE RETARDANT PAINT.
6. TY-WRAPS SHALL NOT BE CINCHED DOWN TIGHT ENOUGH TO DEFORM CABLES. MAINTAIN MINIMUM BEND RADIUS ON FIBER, TIE CABLES, STATION WIRES, AND PATCH CORDS.
7. REFER TO SPECIFICATIONS FOR CABLING. ALL CABLING SHALL BE PLENUM RATED.
8. PROVIDE VELCRO CABLE WRAPS AT RACKS TO PROPERLY LACE AND TRAIN PATCH CORDS AT RACKS IN AN ORDERLY FASHION.
9. FIELD VERIFY MOUNTING SPACE IN DATA RACK ROOM. PROVIDE WALL MOUNTED RACKS WHERE NECESSARY.
10. CABLING FOR COMPUTER DATA SHALL BE ROUTED VIA CABLE TRAY SYSTEM. PROVIDE CONDUIT TO 6 IN. ABOVE ACCESSIBLE CEILING. BUNDLE CABLES. SLEEVE THROUGH CORRIDOR WALL USING 4 IN.C.
11. NETWORK HUBS AND ELECTRONICS, RACK MOUNTED UPS, PATCH CORDS AND FIBER OPTIC PATCH CORDS ARE INCLUDED IN CONTRACT.
12. REFER TO POWER SHEETS FOR ADDITIONAL INFORMATION.
13. SEE WIRE MANAGEMENT NOTES.

PHASE 2

Seal: GEORGIA REGISTERED PROFESSIONAL ENGINEER JEFFREY H. McGEE

ELECTRICAL DESIGN
CONSULTANTS, INC.
175 NEW ST. STE.1
MACON, GA 31201
EDC• M24004

Client: SUNBELT BUILDERS™
10641 HWY 36, COVINGTON, GA 30014, TEL: 770 786 3031

Project: R. L. COUSINS CENTER
NEWTON CO. BOC RFP #24-04
8134 GEIGER STREET, N.W.
COVINGTON, GEORGIA.

Issue Date:	Initial	Drwg. Revision Description:
06-27-24	TAW	FOR CONSTRUCTION

Project No.: 2023012
Drwg. Date: 06/27/24
Drwg. Revision:
Drawn By: TAW
Checked By: JHM
File Name:

Sheet Title: ELECTRICAL DETAILS

Sheet No.: E-6.1

© BETA DESIGN GROUP, P.C. 2014. This drawing may be utilized only for the purpose of constructing or installing the work shown thereon at the site of the work specified. Any other use of this drawing, including without limitation any reproduction or alteration of this drawing, without the prior written approval of Beta Design Group P.C. is prohibited.

COM*check* Software Version 4.1.5.5

Interior Lighting Compliance Certificate

Project Information

Energy Code: 2015 IECC
Project Title: R. L. Cousins Center Phase 2
Project Type: New Construction

Construction Site:
8134 Geiger Street N.W.
Covington, GA 30014

Owner/Agent:

Designer/Contractor:
Electrical Design Consultants
175 New Street
Suite 1
Macon, GA 31201

Additional Efficiency Package(s)

Credits: 1.0 Required 1.0 Proposed
Enhanced Interior Lighting Controls, 1.0 credit

Allowed Interior Lighting Power

A Area Category	B Floor Area (ft2)	C Allowed Watts / ft2	D Allowed Watts (B X C)
1-Community Center (Town Hall)	9470	0.89	8428
		Total Allowed Watts =	8428

Proposed Interior Lighting Power

A Fixture ID : Description / Lamp / Wattage Per Lamp / Ballast	B Lamps/ Fixture	C # of Fixtures	D Fixture Watt.	E (C X D)
1-Community Center (Town Hall)				
A: A: 2 FT. X 4 FT. TROFFER: LED Panel 33W:	1	29	34	986
B: B: 4 FT. LED STRIP: LED Other Fixture Unit 36W:	1	6	36	216
C: C: 6 IN. CYLINDER DOWNLIGHT: LED Other Fixture Unit 16W:	1	72	18	1296
D: D: 6 IN. DOWNLIGHT: LED Other Fixture Unit 16W:	1	100	19	1900
E: E: TRACK #1: Wattage based on current limiting device capacity	0	0	120	120
E: E: TRACK #2: Wattage based on current limiting device capacity	0	0	120	120
F: F: 1-FOOT FLEXIBLE UPLIGHT: Other:	1	285	3	855
G: G: 4 FT. LED STRIP: LED Other Fixture Unit 36W:	1	6	36	216
			Total Proposed Watts =	5709

Interior Lighting PASSES: Design 32% better than code

Interior Lighting Compliance Statement

Compliance Statement: The proposed interior lighting design represented in this document is consistent with the building plans, specifications, and other calculations submitted with this permit application. The proposed interior lighting systems have been designed to meet the 2015 IECC requirements in COM*check* Version 4.1.5.5 and to comply with any applicable mandatory requirements listed in the Inspection Checklist.

Jeffrey H. McGee, PE — Name - Title
Signature
04/18/24 — Date

Project Title: R. L. Cousins Center Phase 2 — Report date: 04/18/24
Data filename: Z:\2024 CAD\M24004 RL Cousins Center\WORKING DRAWINGS\ELEC\PHASE 2\RL Cousins Phase COMcheck.ccck

COM*check* Software Version 4.1.5.5

Exterior Lighting Compliance Certificate

Project Information

Energy Code: 2015 IECC
Project Title: R. L. Cousins Center Phase 2
Project Type: New Construction
Exterior Lighting Zone: 2 (Residentially zoned area (LZ2))

Construction Site:
8134 Geiger Street N.W.
Covington, GA 30014

Owner/Agent:

Designer/Contractor:
Electrical Design Consultants
175 New Street
Suite 1
Macon, GA 31201

Allowed Exterior Lighting Power

A Area/Surface Category	B Quantity	C Allowed Watts / Unit	D Tradable Wattage	E Allowed Watts (B X C)
Building Exterior (Walkway < 10 feet wide)	250 ft of	0.7	Yes	175
Overhang (Entry canopy)	1940 ft2	0.25	Yes	485
Stairs (Stairway)	630 ft2	1	Yes	630
			Total Tradable Watts (a) =	1290
			Total Allowed Watts =	1290
			Total Allowed Supplemental Watts (b) =	600

(a) Wattage tradeoffs are only allowed between tradable areas/surfaces.
(b) A supplemental allowance equal to 600 watts may be applied toward compliance of both non-tradable and tradable areas/surfaces.

Proposed Exterior Lighting Power

A Fixture ID : Description / Lamp / Wattage Per Lamp / Ballast	B Lamps/ Fixture	C # of Fixtures	D Fixture Watt.	E (C X D)
Building Exterior (Walkway < 10 feet wide 250 ft of walkway length): Tradable Wattage				
OA: OA: ARCHITECTURAL WALL PACK: LED Other Fixture Unit 36W:	1	7	36	252
Overhang (Entry canopy 1940 ft2): Tradable Wattage				
OB: OB: 6 IN. DOWNLIGHT: LED Other Fixture Unit 25W:	1	19	23	437
Stairs (Stairway 630 ft2): Tradable Wattage				
OC: OC: LED STEP LIGHT: LED Other Fixture Unit 6.5W:	1	15	8	128
OD: OD: 1 FT. LED FLEXIBLE FIXTURE: Other:	1	180	1	252
			Total Tradable Proposed Watts =	1068

Exterior Lighting PASSES: Design 43% better than code

Exterior Lighting Compliance Statement

Compliance Statement: The proposed exterior lighting design represented in this document is consistent with the building plans, specifications, and other calculations submitted with this permit application. The proposed exterior lighting systems have been designed to meet the 2015 IECC requirements in COM*check* Version 4.1.5.5 and to comply with any applicable mandatory requirements listed in the Inspection Checklist.

Jeffrey H. McGee, PE — Name - Title
Signature
04/18/24 — Date

ALPHA BLDG SET 08-27-2024

PHASE 2

Seal: GEORGIA REGISTERED PROFESSIONAL ENGINEER JEFFREY H. McGEE

ELECTRICAL DESIGN CONSULTANTS, INC.
175 NEW ST.-STE.1
MACON, GA 31201
EDC• M24004

Client: sunbelt BUILDERS™
10641 HWY 36, COVINGTON, GA 30014, TEL: 770 786 3031

Project: R. L. COUSINS CENTER
NEWTON CO. BOC RFP #24-04
8134 GEIGER STREET, N.W.
COVINGTON, GEORGIA.

Issue Date:	Initial:	Drwg. Revision Description:
06-27-24	TAW	FOR CONSTRUCTION

Project No.: 2023012
Drwg. Date: 06/27/24
Drwg. Revision:
Drawn By: TAW
Checked By: JHM
File Name:

Sheet Title: LIGHTING COMCHECK REPORTS

Sheet No.: E-6.2

© BETA DESIGN GROUP, P.C. 2014 This drawing may be utilized only for the purpose of constructing or installing the work shown thereon at the site of the work specified. Any other use of this drawing, including without limitation any reproduction or alteration of this drawing, without the prior written approval of Beta Design Group P.C. is prohibited.