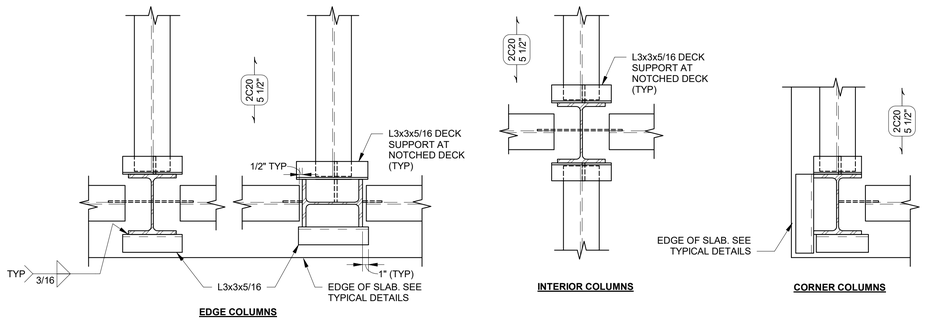

NOTES:

1. DETAILS APPLY AT WIDE FLANGE AND HSS COLUMNS
2. ATTACH DECK TO SUPPORT ANGLES (TYP)

DECK SUPPORT ANGLE AT COLUMN - PLAN

SCALE: 1" = 1'-0"

1 / S512

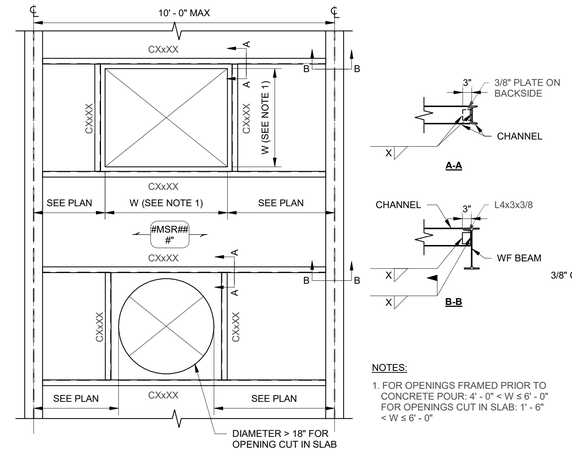

NOTES:

1. FOR OPENINGS FRAMED PRIOR TO CONCRETE POUR: 4' - 0" < W ≤ 6' - 0"
FOR OPENINGS CUT IN SLAB: 1' - 6" < W ≤ 6' - 0"

TYPICAL FRAMED OPENING IN COMPOSITE SLAB - PLAN

SCALE: 1/2" = 1'-0"

2 / S512

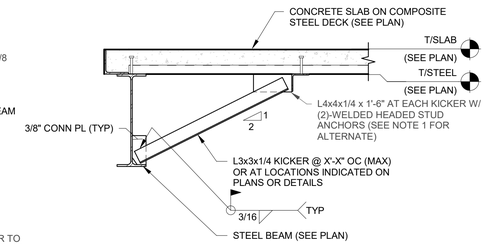

NOTES:

1. IF BRACING IS INSTALLED AFTER SLAB ON DECK IS PLACED, POST INSTALL CLIP ANGLE TO BOTTOM OF DECK W/ (2)-1/2" DIA EXPANSION ANCHORS CENTERED IN FLUTE 12" OC W/ 2" EMBEDMENT

TYPICAL BEAM BRACING AT FLOOR - SECTION

SCALE: 3/4" = 1'-0"

3 / S512

Brown AND Caldwell

BROWN AND CALDWELL
900 HAMMOND DRIVE, SUITE 500
ATLANTA, GA 30328

wendel

THIS DRAWING IS NOT VALID FOR CONSTRUCTION PURPOSES UNLESS IT BEARS THE SEAL AND SIGNATURE OF A DULY REGISTERED PROFESSIONAL

Project Status

NCWSA NEWTON COUNTY WATER & SEWERAGE AUTHORITY

Project Name

REVISIONS

REV	DATE	DESCRIPTION

LINE IS 2 INCHES AT FULL SIZE

DESIGNED: Designer
DRAWN: Author
CHECKED: Checker
CHECKED:
APPROVED: Approver

FILENAME

BC PROJECT NUMBER
Project Number
CLIENT PROJECT NUMBER

COMPOSITE STEEL FRAMING DETAILS

DRAWING NUMBER
S512

Plot Date: 1/20/2026 7:10:58 PM Path: Autodesk Docs://NCWSA Admin Bldg_ V25/02506B3-NCWSA Office Addition-R25-STRUCT4.rvt

ZULU 30% BID SET 01-28-2026